Chapter 2 – FLIGHT TEST INSTRUMENTATION AND METHODS

2.1 GENERAL

This chapter will address some of the test methods, data analysis techniques, and unique test support required for flight testing of modern aircraft and aircraft systems, with particular emphasis for some of the most demanding experimental tasks: flightpath reconstruction for modern airborne navigation and landing systems flight testing.

Modern aircraft navigation/landing systems typically consist of a combination of inertial navigation or reference systems and radio navigation systems, utilising navigation aids such as the Global Positioning System (GPS), VHF Omni-directional Radio-range (VOR), Distance Measuring Equipment (DME), Tactical Air Navigation (TACAN), Instrument Landing System (ILS), and Microwave Landing System (MLS). The main objective of testing these systems is to determine their accuracies, together with their compatibility with the overall aircraft avionics suite. Accurate determination of the aircraft position is therefore a strong requirement in navigation flight testing. Earth-relative position and velocity components are typically determined by an inertial navigation system (INS), ground-based radar, laser, or optical tracker. All of these solutions however show some disadvantages. Either they are limited in precision, limited in range, weather dependent, contain a high degree of post-processing work, are fixed in location at specific ranges, or sometimes require a major modification of the aircraft. All of these shortcomings can be overcome by using satellite navigation systems.

In this chapter a brief overview of traditional methods used for reference flight path trajectory determination are presented, together with their relative advantages and limitations. DGPS applications in the flight test environment are only introduced here, as a more comprehensive analysis of DGPS techniques for flight test/ inspection is presented in Chapter 3.

2.2 CURRENT NAVIGATION AND LANDING SYSTEMS

Today, aircraft are equipped with a variety of navigation systems depending on the application (Table 2-1). For long range navigation aircraft are normally equipped with INS, and/or Omega, and/or LORAN C, where LORAN C is only available in certain areas like the continental USA. More and more aircraft already use GPS for the same purpose as well as for medium range navigation. This navigational task is traditionally performed with VOR and DME or, for military aircraft, with TACAN. Instrument (ILS) and microwave landing systems (MLS) provide the guidance signals for landing. The highest horizontal accuracy is required for ILS and MLS. These systems also yield a very accurate vertical position reference. For less demanding vertical positioning, barometric and radar altimeters can be used.

Table 2-1: Current Navigation and Landing Systems

Application	Range (km)	System	Accuracy (m)
Long Range Nav	10.000	INS , VLF-Omega	20.000
Medium Range Nav	500	VOR/DME	200
Precision Approach	50	ILS/MLS	2

2.3 FLIGHT TEST REQUIREMENTS

All of the mentioned standard navigation systems are in use for flight testing as well. However, many tasks demand a higher precision with accuracy in the meter or even sub-meter range. This is often required for modern avionics navigation systems testing (e.g., determination of the performance of satellite and integrated navigation systems), as well as for performance data verification (e.g., take-off and landing distance computation), determination of aerodynamic parameters for the evaluation of handling characteristics, and generation of special flight patterns for noise certification. Very high accuracy is required for flight testing of current ILS systems (Table 2-2).

Table 2-2: Federal Aviation Administration (FAA) ILS Required Accuracy

Category	Height Above Surface (ft)	Lateral (ft-2σ)	Vertical (ft-2σ)
I	200	± 56.1	± 13.6
II	100	± 16.9	± 5.7
III	50	± 13.2	± 1.8

The most demanding tasks in terms of accurate trajectory data requirements are currently the autoland certification and flight inspection of MLS and CAT-IIIA ILS installations (Figure 2-1).

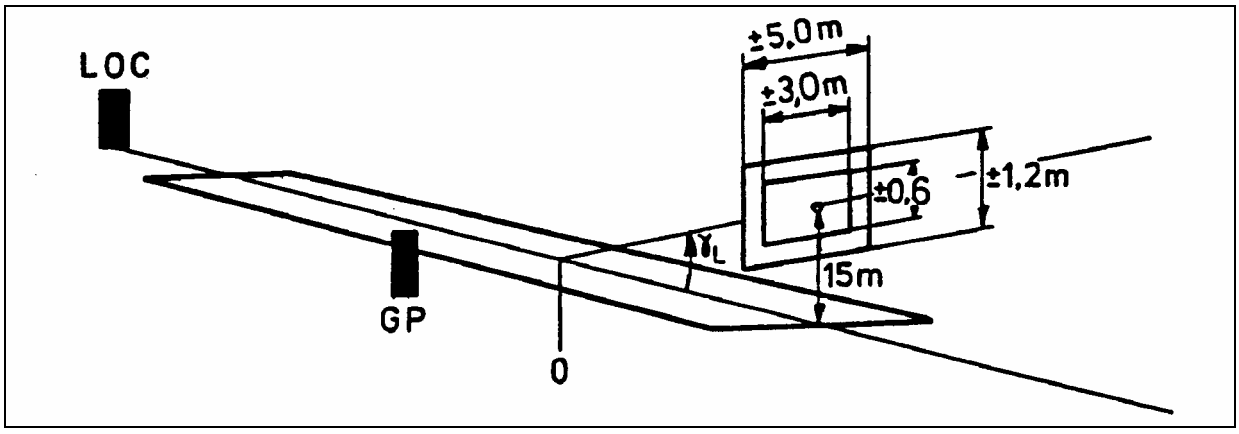

Figure 2-1: ICAO ILS CAT-IIIA Accuracy Requirements (Adapted from Ref. [1]).

2.3.1 Avionics Systems Flight Testing

The field of avionics systems can be divided into four general categories, traditionally including: navigation, autopilot, communications and offensive/defensive systems. A fifth overall test category of "integration" can be also identified. Due to the aim of this dissertation, we will mainly concentrate on navigation systems flight testing, which can be considered the most demanding (in terms of TSPI data requirements) amongst typical tasks. More details about avionics test requirements and data analysis techniques can be found in many reference publications, such as the NATO Research and Technology Organisation (RTO) Systems Concepts and Integration Panel (SCI) AGARDograph AG-300 Series on Flight Test Techniques and AG-160 Series on Flight Test Instrumentation [2 – 5].

2.3.1.1 Navigation Systems

The primary objectives of flight testing aircraft navigation systems is to evaluate the following:

- System accuracy (latitude/longitude, range, bearing, glide slope, etc.);
- System error rates (latitude error rate, longitude error rate, radial error rate);
- System functionality (modes and displays perform as designed);
- System operational suitability (system ability to provide acceptable navigation capabilities for the intended operational applications); and
- System electromagnetic compatibility and resistance to jamming.

The assessment of navigation system performance is generally divided into two parts, navigation accuracy and guidance accuracy, both laterally and vertically. Full-up performance in this case is similar to fault free performance, it means all system inputs are available. Loss of an input need not be due to a failure, but could result from loss or degradation of a radio navigation sensor due to propagation conditions.

The objective of navigation accuracy testing is to measure how well the navigation system determines the actual aircraft position. This need not always be a complicated test. It may be a simple verification of a system that has been used many times before. In that case it may be sufficient to fly over a couple of clearly distinguishable landmarks and compare the position as given by the system with the known position of the landmark.

In the case of certification/qualification of a new system some statistical proof is usually required. The basic idea is to gather a statistically sufficient number of position samples together with the same amount of samples from a reference navigation system. This could be a special system on board the aircraft, but it may also be a ground-based radar or laser tracking system. The drawback of these latter systems is that a ground facility is required. The facility must be set up or booked in advance and the tests are confined to a certain area. If a self-contained system on board the aircraft is available (e.g., a GPS receiver), the test can be conducted during other tests.

The objective of guidance accuracy testing is to measure how well the system brings the aircraft on the desired track and how well it keeps on track. The emphasis is on the qualities of the steering signals the navigation system provides to the autopilot. Parameters to look for are: overshoot as a function of intercept angle and ground speed, possible oscillations around the track after the intercept, offset from the track as a function of cross wind, and quality of the aircraft roll and pitch movements.

Essentially, degraded performance tests are the same as full-up performance. The difference, of course, is that the system is degraded either due to failure(s) or due to loss or degradation of one or more sensor inputs. The effect is that the navigation accuracy is degraded. An example is a navigation system that uses an INS position mixed with GPS data. When the GPS signal is lost the position accuracy will degrade with time. Because of the degraded navigation accuracy, there may be operational restrictions to the use of the navigation system and appropriate warnings to the crew should be generated.

2.3.2 Aircraft Parameters

Due to the ever-changing designs, implementations, and technology of navigation systems the data types, data sources, and data collection rates are constantly changing. The most important concept in the flight testing of all navigation systems is to collect the type of data appropriate to the system and complexity of the test at a rate ideally at three times the rate of change of the fastest changing parameter. Due to data rate issues, this may not be possible.

As stated before, careful consideration should be given to what should be measured. It is important not only to measure the primary parameter of interest, but also those that will enable sufficient analysis of what is going on. This includes the whole range from hand-recorded data to high speed automatic data recording.

There are a number of basic parameters that are common to most navigation systems testing such as aircraft position, airspeed, altitude, vertical velocity, Mach number, heading, angles of pitch, roll, sideslip, yaw, and attack, and accelerations along body axes.

Several tests require accurate measurement of flightpath trajectory (continuous determination of the Earth-relative position of the aircraft). Particularly aircraft position (i.e., 3-dimensional coordinates) from the system under test and high-rate aircraft position from the reference system are required. Other peculiar parameters required for navigation systems flight testing are: baro-correction, vertical speed, ground speed (wind speed and direction can be determined from airspeed and ground speed), desired track, track angle error, flight plan vertical flight path and flight path error, roll and pitch steering commands, throttle command, system mode/status discretes, inertial system mode data, and inertial system control data.

2.4 MEASUREMENT OF FLIGHTPATH TRAJECTORIES

Optical and optronic systems are widely used today for the accurate measurement of flightpath trajectory. Typical solutions include: theodolites, infrared trackers, laser trackers, and inertial systems with camera or manual position update. Even on-board camera systems are in use for autoland certification. However, since optical and optronic systems are limited in range, specially developed radar systems are also available to cover ranges of up to about 100 km. The types of instruments utilised for flightpath measurement depend on the task. In the next subsections, after a general introduction to the coordinate systems used for the representation of flightpath trajectories, a short description of the different measurement types together with their advantages and disadvantages are given.

2.4.1 Coordinate Systems

There are mainly two different coordinate systems which are used for the representation of flightpath trajectories: Cartesian coordinates and geographical coordinates. For some applications the use of a local Cartesian coordinates system has some advantages. They are sufficient if the measurements are carried out in relatively small area with size of some kilometres. Examples are takeoff and landing performance measurements and ballistic measurements at small ranges.

If, however, a navigation system like VOR, a satellite navigation system or an inertial system will be tested, a relation between the positions of the trajectory measuring system and the navigation system has to be established. The easiest way to do this is the use of global geographical coordinates (Figure 2-2). This is meaningful especially for measurements in the aviation field, because in aviation all positions are given in geographical coordinates. The transformation of local Cartesian coordinates into geographical coordinates can be performed by the following method.

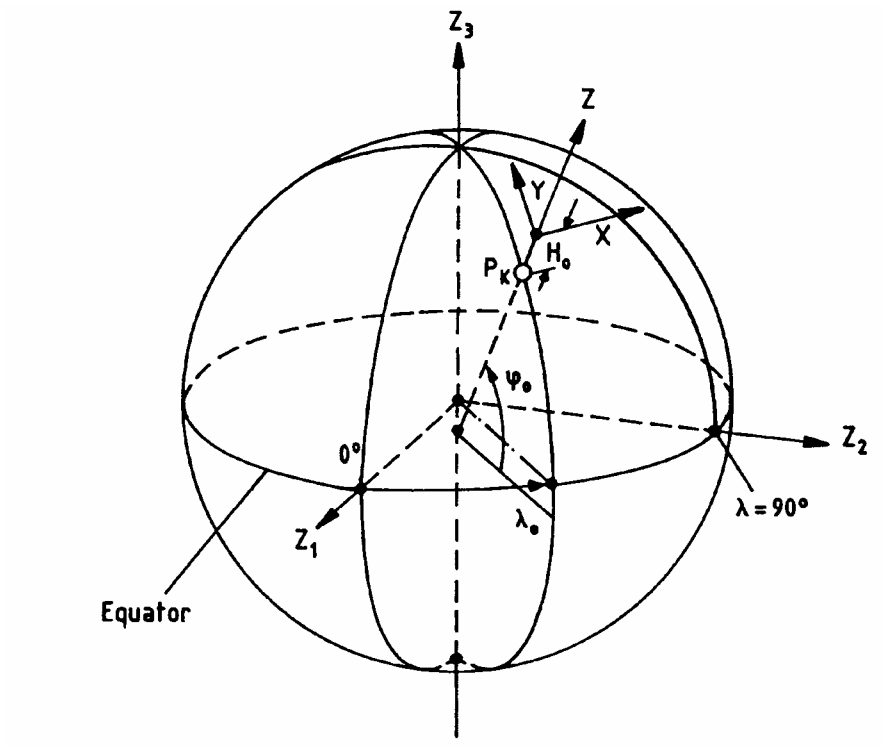

Figure 2-2: Geographical and x/y/z Coordinates.

As a first step, a coordinate transformation of the x/y/z-system into the Earth-centred system z_1, z_2, z_3 is necessary:

$$\begin{vmatrix} z_1 \\ z_2 \\ z_3 \end{vmatrix} = \begin{vmatrix} z_{10} \\ z_{20} \\ z_{30} \end{vmatrix} + \begin{vmatrix} -sin\lambda_o & -sin\psi_o \cos\lambda_o & \cos\psi_o \cos\lambda_o \\ \cos\lambda & -sin\psi_o \cos\lambda_o & \cos\psi_o sin\lambda_o \\ 0 & \cos\psi_o & sin\psi_o \end{vmatrix} \times \begin{vmatrix} x \\ y \\ z \end{vmatrix} \tag{2.1}$$

where:

$$z_{10} = \left(N_o + H_o\right)\cos\psi_o \cos\lambda_o$$

$$z_{20} = \left(N_o + H_o\right)\cos\psi_o sin\lambda_o$$

$$z_{30} = \left[N_o\left(1 - e^2\right) + H_o\right] sin\psi_o \ , \ N_o = a \Big/ \sqrt{\left(1 - .e^2 sin^2\psi_o\right)}$$

λ_o, ψ_o, H_o	=	geographical coordinates of the centre of the x/y/z coordinate system;
a	=	semi-major axis of the reference ellipsoid;
b	=	semi-minor axis of the reference ellipsoid; and
e	=	eccentricity of the reference ellipsoid $\left(e^2 = \left(a^2 - b^2\right)/a^2\right)$.

The geographical coordinates are then obtained using the following equations:

$$\cot an\lambda_p = z_1 / z_2 \tag{2.2}$$

$$\cot an\,\psi_p = \frac{\sqrt{z_1^2 + z_2^2}}{z_3} \times \left(1 - \frac{e^2}{1 + H_p / N}\right) \tag{2.3}$$

$$H_p = \sqrt{z_1^2 + z_2^2}\cos\psi_p + z_3 sin\,\psi_p - a\sqrt{\left(1 - e^2 sin^2\psi_p\right)} \tag{2.4}$$

When computing ψ_p there is a difficulty because H_p and N can only be calculated if ψ_p is known. One should use an iterative method beginning with $H_p = 0$ or using the altitude from an altimeter. After the first calculation of ψ_p a first approximation of H_p and N can be determined. Using these approximations an improved value for ψ_p can be obtained. This method converges very rapidly.

One of the difficulties often encounter in flight path trajectory determination is the need to convert from one coordinate reference frame to another, using appropriate mathematical models (e.g., Helmert transform, standard or abridged Molodensky formulas, etc.) and accurate transformation parameters. Although significant efforts are being devoted to standardisation within the NATO community, many coordinate reference systems are in use today (e.g., UTM coordinates, Gauss-Boaga coordinates for ordinance survey of Italy, WGS-84 for GPS data, ED-50 for most in-service INS systems, etc.), and coordinates transformations are frequently required during flight test activities. Details concerning these systems, and the methods for converting coordinates from one system to the other, can be found in the references [6].

2.4.2 Range Instrumentation

The most important systems for measuring flightpath trajectories are cinetheodolites, tracking radars, laser trackers, and laser or microwave ranging systems. Due to the improvement in computer technology, integration between different systems is often carried out. In particular, the combination between INS on-board the test aircraft with the above-mentioned instruments becomes more and more important.

A cinetheodolite (Figure 2-3) is a camera that periodically records on film the azimuth and elevation of the line of sight to a target together with the target itself. Because a cinetheodolite only measures two angles, at least two separate instruments are necessary for the determination of three coordinates of the target. However, three separate theodolites are desirable for increasing the accuracy and reliability. Before cinetheodolites can be used for the determination of flightpaths, their sites need to be surveyed and the reference points on the aircraft must be well defined. The initial cost and amortisation of these systems are generally lower than for other equipment of comparable accuracy (e.g., tracking radars), but the processing of cinetheodolite measurements using classical methods is expensive and tedious. Cinetheodolite systems are ideal for measuring the trajectory of targets near the horizon or on the ground. Particularly, targets at short or medium slant ranges can be measured with high absolute accuracy if the slant visibility is satisfactory.

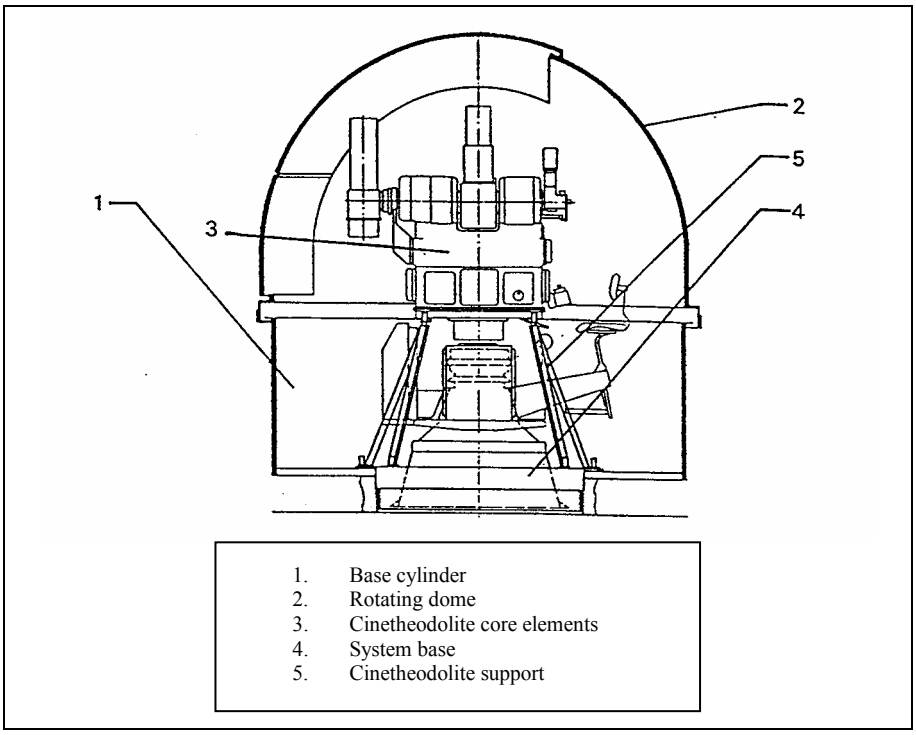

Figure 2-3: Cinetheodolite System.

An INS generally provides a complete Earth-relative data set, self-contained in the aircraft, but these data are subject to drift errors. Manoeuvring flight aggravates these drift errors. An INS that uses ring-laser gyroscopes generally has less drift than one that uses mechanical gyroscopes. Altitude from an INS typically uses air-data to stabilise its integration loop. Beside the position, the velocities and attitude angles are also determined with INS, and when using Kalman filter these quantities can be estimated with a high degree of accuracy. Since all relevant data from the INS are nearly continuously determined, high frequency motions of the aircraft can be measured very accurately. However, some INS units have significant transport delays or lags because of filtering, or both, that should be taken into account (in order to get the highest accuracy, online evaluation is not possible). The range of applications of INS includes measurements for certification of takeoff and landing performance of aircraft and, in connection with updates from systems like DME, radio altimeters, and video systems, testing of radio navigation systems. Using a tracking radar and/or laser tracker for updating the INS testing of all kinds of navigation systems is possible.

Also ground-based radar or laser trackers can be used to determine aircraft position and velocity. These trackers are not subject to the kinds of drift that INS experience, but they are susceptible to errors, such as atmospheric refraction [7]. Tracking radars are ideal for determining the trajectory of targets at medium or large ranges under nearly all weather conditions, but the effect of angular errors has to be considered. Laser trackers can measure the position of a test aircraft with an higher accuracy. An angular accuracy can be reached which is higher than 0.01° and range accuracies of better than 1 m are possible. These performances are sufficient for takeoff and landing measurements, test of instrument landing systems and dynamic tests of precision navigation systems. However, radars can track aircraft to much greater distances than laser systems.

Also radio electric ranging systems can be used for flightpath trajectory determination. There are different systems in use, but in all cases range measurements should be carried out from at least three different ground stations. Generally however, to improve the accuracy and for redundancy reasons more than three

measurements for calculating one position are used. All electric ranging systems consist of measuring units located on the ground and one unit located in the target being tracked. Most systems use a transponder in the target and interrogators on the ground, but the opposite procedure is also possible. Before measurements can be performed the positions of all ground units should be determined. Under good geometrical conditions typical position accuracies are in the order of 3 to 10 m (2σ). Radio electric ranging systems are typically used at test ranges for aircraft performance and certification measurements, but the effect of great altitude errors in the case of low elevation angles has to be considered.

The calculation of the positions concerning all systems is carried out using the mathematical methods described in the following paragraphs.

2.4.3 Mathematical Methods

Mathematical methods currently in use for flightpath trajectory determination include:

- Calculation of x/y/z coordinates and transformation into geographical coordinates;
- Method of least squares adjustment for redundant measurements computation; and
- Kalman filtering for integration of INS with optronic or other traditional sensors.

A description of these methods, together with a discussion on there relative advantages and limitations are presented below.

2.4.3.1 Determination of x/y/z Coordinates

The measurements of many instruments are angles or distances. For most applications, these measurements cannot be used, but have to be converted into x/y/z coordinates. Often an additional transformation into geographical coordinates (see Section 2.4.1) or other coordinate systems is necessary.

- **Tracking Radar and Laser Tracker.** In the case of a tracking radar (or a laser tracker), which is sited in the origin of the coordinate system, the x/y/z coordinates are obtained using the following equations:

$$x = \rho \cos\gamma sin\sigma;\ y = \rho \cos\gamma \cos\sigma;\ z = \rho sin\gamma \tag{2.5}$$

  where ρ is the radar range, σ the measured azimuth and γ the elevation.

- **Cinetheodolites.** When using two cinetheodolites the following procedure can be used. First, the horizontal distance between cinetheodolite number 1 and the target should be calculated (Figure 2-4):

$$e_1 = b_{12} \frac{sin(\beta_{12} - \sigma_2)}{sin(\sigma_1 - \sigma_2)} \tag{2.6}$$

  In a second step the x/y/z coordinates can be determined using only the data from cinetheodolite number 1 similar to tracking radar measurements:

$$x = x_1 + e_1 \cos\sigma_1; \quad y = y_1 + e_1 sin\sigma_1; \quad z = z_1 + e_1 tg\gamma_1 \tag{2.7}$$

  The disadvantage of this method is that the elevation angle of cinetheodolite number 2 is not taken into account. A method that uses all measurements is described in Section 2.4.3.2.

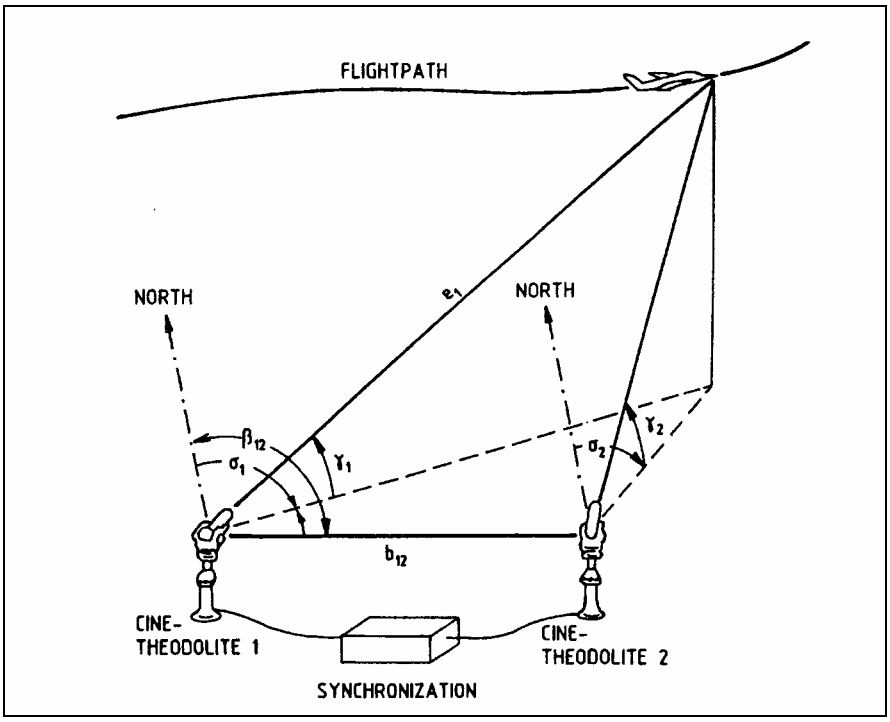

Figure 2-4: Trajectory Measurement by Means of Two Cinetheodolites.

- **Ranging Systems.** In the case of three range measurements the following equation is valid:

$$\rho_k = \sqrt{(x - x_k)^2 + (y - y_k)^2 + (z - z_k)^2} \tag{2.8}$$

where:

k	=	1, 2, 3;
ρ_k	=	range measurement of station k;
x_k, y_k, z_k	=	position of the ranging station k in the x/y/z-coordinate system; and
x, y, z	=	position of the target to be measured.

Because the terms of equation (2.8) are non-linear, an iteration is necessary in order to determine the x, y, z coordinates. After starting with an approximate value x_o, y_o, z_o a linearization of equations (2.8) can be performed:

$$\Delta\rho_k = \rho_k - \sqrt{(x_o - x_k)^2 + (y_o - y_k)^2 + (z_o - z_k)^2} = \Delta x h_{1k} + \Delta y h_{2k} + \Delta z h_{3k}$$

$$h_{1k} = \frac{x_o - x_k}{R_k} \qquad h_{2k} = \frac{y_o - y_k}{R_k} \qquad h_{3k} = \frac{z_o - z_k}{R_k}$$

$$R_k = \sqrt{(x_o - x_k)^2 + (y_o - y_k)^2 + (z_o - z_k)^2} \qquad k = 1, 2, 3 \tag{2.9}$$

The correction values Δx, Δy, and Δz are obtained by using:

$$\begin{vmatrix} \Delta x \\ \Delta y \\ \Delta z \end{vmatrix} = \begin{vmatrix} h_{11} & h_{21} & h_{31} \\ h_{12} & h_{22} & h_{32} \\ h_{13} & h_{23} & h_{33} \end{vmatrix}^{-1} \times \begin{vmatrix} \Delta\rho_1 \\ \Delta\rho_2 \\ \Delta\rho_3 \end{vmatrix} \tag{2.10}$$

Δx, Δy, and Δz now can be used for calculating a better position estimate:

$$x = x_o + \Delta x; \qquad y = y_o + \Delta y; \qquad z = z_o + \Delta z \tag{2.11}$$

This position can be used again for a new iteration step. The iterations should be stopped when the calculated corrections Δx, Δy, and Δz are below a predetermined threshold.

2.4.3.2 Method of Least Squares Adjustment

For the determination of one position at a certain time only three measurements are necessary (e.g., three range measurements), but in many cases there are more measurements available. The most suitable method used for redundant measurements computation is the so-called method of least squares adjustment. In a first step, approximate values x_o, y_o, z_o have to be calculated. This can be done using one of the methods described before. The most probable position is then calculated by using equation (2.11). The essential part of the method is the determination of Δx, Δy, and Δz. The next step for doing this is the formulation of observation equations. In the case of using two cinetheodolites and one tracking radar or laser tracker these equations are as follows:

$$\left.\begin{aligned} v_1 &= \sigma_1 - arctg\frac{x_o - x_1}{y_o - y_1} \\ v_2 &= \gamma_1 - arctg\frac{z_o - z_1}{d_1} \end{aligned}\right\} \text{Cinetheodolite 1}$$

$$\left.\begin{aligned} v_3 &= \sigma_2 - arctg\frac{x_o - x_2}{y_o - y_2} \\ v_4 &= \gamma_2 - arctg\frac{z_o - z_2}{d_2} \end{aligned}\right\} \text{Cinetheodolite 2}$$

$$\left.\begin{aligned} v_5 &= \sigma_3 - arctg\frac{x_o - x_3}{y_o - y_3} \\ v_6 &= \gamma_3 - arctg\frac{z_o - z_3}{d_3} \\ v_7 &= \rho_3 - \sqrt{(x_o - x_3)^2 + (y_o - y_3)^2 + (z_o - z_3)^2} \end{aligned}\right\} \text{Radar}$$

$$d_k = \sqrt{(x_o - x_k)^2 + (y_o - y_k)^2} \quad k = 1, 2, 3 \tag{2.12}$$

where:

x_k, y_k, z_k	=	positions of cinetheodolites and of the radar, respectively;
σ_k	=	measured azimuth angles;

γ_k = measured elevation angles; and

ρ_3 = measured range.

The values ($v_1 \ldots v_7$) on the left side of the equations in (2.12) are measurement contradictions. They are zero if the first approximation for the position is correct and if there are no measurement errors. In actuality, these contradictions can never be zero because of measurement errors. Method of least squares adjustment calculates the corrections Δx, Δy, and Δz under the condition that the resulting weighted square sum of the residuals $\left(v^T R^{-1} v\right)$ becomes a minimum (v is the vector which contains the contradictions v_n after applying the corrections Δx, Δy, and Δz; R is the covariance matrix of the measurement errors). The diagonal elements of the covariance matrix R contain the squared standard deviations of the measurement errors. Therefore, the a priori accuracies of the measurements are taken into account. Because equations (2.12) are non-linear a linearization is necessary:

$$\left.\begin{aligned} v_1 &= H_{1,1}\Delta x + H_{2,1}\Delta y + H_{3,1}\Delta z \\ v_2 &= H_{1,2}\Delta x + H_{2,2}\Delta y + H_{3,2}\Delta z \end{aligned}\right\} \text{Cinetheodolite 1}$$

$$\left.\begin{aligned} v_3 &= H_{1,3}\Delta x + H_{2,3}\Delta y + H_{3,3}\Delta z \\ v_4 &= H_{1,4}\Delta x + H_{2,4}\Delta y + H_{3,4}\Delta z \end{aligned}\right\} \text{Cinetheodolite 2}$$

$$\left.\begin{aligned} v_5 &= H_{1,5}\Delta x + H_{2,5}\Delta y + H_{3,5}\Delta z \\ v_6 &= H_{1,6}\Delta x + H_{2,6}\Delta y + H_{3,6}\Delta z \\ v_7 &= H_{1,7}\Delta x + H_{2,7}\Delta y + H_{3,7}\Delta z \end{aligned}\right\} \text{Radar} \qquad (2.13)$$

or:

$$v = H \cdot \begin{vmatrix} \Delta x \\ \Delta y \\ \Delta z \end{vmatrix} \qquad (2.14)$$

The elements of matrix H are as follows:

Azimuth measurements

$$H_{1,n} = \frac{y_o - y_k}{D_k^{\,2}} \qquad H_{2,n} = -\frac{x_o - x_k}{D_k^{\,2}} \qquad H_{3,n} = 0$$

$$n = 1, 3, 5 \qquad k = 1, 2, 3$$

Elevation measurements

$$H_{1,n} = -\frac{\left(z_o - z_k\right)\left(x_o - x_k\right)}{D_k\,\rho_k^{\,2}} \qquad H_{2,n} = -\frac{\left(z_o - z_k\right)\left(y_o - y_k\right)}{D_k\,\rho_k^{\,2}} \qquad H_{3,n} = \frac{D_k}{\rho_k^{\,2}}$$

$$n = 2, 4, 6 \qquad k = 1, 2, 3$$

Range measurements

$$H_{1,7} = \frac{x_o - x_3}{\rho_3} \qquad H_{2,7} = \frac{y_o - y_3}{\rho_3} \qquad H_{3,7} = \frac{z_o - z_3}{\rho_3}$$

$$D_k = \sqrt{\left(x_o - x_k\right)^2 + \left(y_o - y_k\right)^2}$$

$$\rho_k = \sqrt{\left(x_o - x_k\right)^2 + \left(y_o - y_k\right)^2 + \left(z_o - z_k\right)^2}$$

The correction values Δx, Δy, and Δz are obtained by solving the following matrix equations:

$$\begin{vmatrix} \Delta x \\ \Delta y \\ \Delta z \end{vmatrix} = PH^T R^{-1} v \tag{2.15}$$

$$P = \left(H^T R^{-1} H\right)^{-1} \tag{2.16}$$

where P is the error covariance matrix for the computed position. The vector v is calculated using equations in (2.12). In some cases it may be necessary to repeat the calculations and start with the approximation:

$$x'_o = x_o + \Delta x; \qquad y'_o = y_o + \Delta y; \qquad z'_o = z_o + \Delta z \tag{2.17}$$

A disadvantage of the method of least squares adjustment is the need for carrying out a great amount of calculations – but this is not a big issue with modern computers. Typical computing times for calculating one position are in the order of milliseconds. With this method all measurements from the systems are used in an optimal manner and the different measurement accuracies of the sensors are taken into account. The number of measurement equations in (2.12) can be expanded for any number of instruments. Therefore, this method can be used for integration of a great variety of different measurement systems. Together with the most probable positions the error covariance matrices are automatically estimated. This is useful when integrating positions from classical instruments for flightpath determination with on-board sensors like inertial navigation systems with the aid of Kalman filters.

2.4.3.3 Kalman Filtering

Before each test all sensors for flightpath determination have to be calibrated in order to minimise bias errors. Therefore, the measured positions contain mainly random errors with small correlation times. For example in the case of tracking radar measurements these errors are due to the fluctuation of the radar cross section area. Smoothing of such type of errors may be performed with the aid of least square polynomial filtering. The disadvantage of this method is that, together with the noise, also high frequent movements of the target are smoothed out. A combination of redundant navigation information from inertial navigation systems (INS) on board the test aircraft with other sensors for flightpath trajectories allows the separation of the above mentioned noise and the manoeuvres of the aircraft. INS have relatively low frequency position errors so that it seams quite convenient to combine them with other instruments for flightpath measurements. An algorithm frequently employed in flight testing for post-processing integration of INS data is the Rauch-Tung-Striebel algorithm, which consists of a Kalman filter and a backward smoother [3].

2.4.4 Limitations of Traditional Methods

All of the above mentioned solutions show some disadvantages. Either they are limited in precision, limited in range, weather dependant, contain a high degree of post-processing work, are fixed in location at specific airports, or sometimes require a major modification of the aircraft. All of these shortcomings can be overcome by using Satellite Navigation.

2.4.5 Satellite Navigation Systems

Two Global Navigation Satellite Systems (GNSS) have been developed during the last decades: the American GPS and the Russian GLONASS. Furthermore, a new challenge facing the European nations is now the development of the civilian GALILEO system. GPS and GLONASS provide a continuous, world-wide services under all-weather conditions, and both systems provide far higher accuracy than any other current long and medium range navigation system (Table 2-3).

Table 2-3: Navigation Systems Accuracy Comparison

SYSTEM	ACCURACY
GPS (C/A, L1)	100 m 2-D, 95 %
DGPS – carrier smoothed	< 3 m
DGPS – carrier phase dynamic applications	< 0.5 m
GLONASS	18 m
VOR (distance = 10 NM)	1200 m
DME	< 450 m
VLF – OMEGA	> 1000 m
INS	1800 m/h
AHRS	> 1800 m/h

Position data from a GPS receiver may be degraded by selective availability (currently suspended) when a non-military receiver is used, but velocities are not affected by this problem. Using DGPS greatly increases position accuracy, but a reference ground receiver is needed (see Chapter 1). If required, the Euler angles of the aircraft can be measured using multiple GPS antennae on the aircraft and detecting the carrier phase of the GPS signal. Another type of reference blends INS and GPS data. Combining GPS and INS different depths of integration can be realised, mainly depending on the accuracy limits, the computer time capacity, the INS sensor concept and the stand-alone capacity of each subsystem in the emergency case of a system failure. In the past GPS was only used to update the position of the INS (in other words, to control the drift behaviour of the INS), for example, using GPS Doppler observations or positioning updates. In that type of combinations INS still played the first role in the filtering algorithms (mostly Kalman Filter). When looking to the high accuracy potential of DGPS, it appears possible to go the other way around, namely to get the positioning information primarily from DGPS. Thus, the INS is now becoming the secondary sensor enabling higher interpolation in DGPS positioning updates, providing the attitude control, damping short periodic influences in DGPS, and assisting in cycle

slip detection and integer ambiguity resolution on-the-fly. Clearly, both types of observations enter the Kalman filter, and only the different weighting of the data decides which sensor mainly contributes to the integrated result. The various possible applications of GPS and DGPS in the flight test environment are discussed in the next chapter.

2.5 REFERENCES

[1] Aeronautical Telecommunications, International Civil Aviation Organisation (ICAO). ANNEX 10 (Incl. Change Notices 1-32). Ed. 2005.

[2] Stoliker, F. (2005). "Introduction to Flight Test Engineering". NATO Research and Technology Organisation (RTO) – Systems Concepts and Integration Panel (SCI). Flight Test Techniques Series AGARDograph (AG-300), Volume 14 (Issue 2).

[3] NATO Advisory Group for Aerospace Research and Development (AGARD) – Flight Vehicle Integration Panel. Flight Test Instrumentation Series AGARDograph (AG-160), Volume 16. (1985). "Trajectory Measurements for Take-Off and landing Tests and Other Short Range Applications".

[4] NATO Advisory Group for Aerospace Research and Development (AGARD) – Flight Vehicle Integration Panel. Flight Test Instrumentation Series AGARDograph (AG-160), Volume 1 (Issue 2). (1995). "Basic Principles of Flight Test Instrumentation Engineering".

[5] NATO Research and Technology Organisation (RTO) – Systems Concepts and Integration Panel (SCI). Flight Test Techniques Series AGARDograph (AG-300), Volume 14. (2003). "Flight Testing of Radio Navigation Systems".

[6] Defence Mapping Agency, (1991). "Datums, Ellipsoids, Grids, and Grid Reference Systems". DMA TM 8358.1. Fairfax (VA).

[7] Hurrass, K. (1995). "Measuring of Flightpath Trajectories". NATO Advisory Group for Aerospace Research and Development (AGARD) – Flight Vehicle Integration Panel. Flight Test Instrumentation Series AGARDograph (AG-160), Volume 1 (Issue 2).