Chapter 3 – GPS AND DGPS RANGE APPLICATIONS

3.1 INTRODUCTION

In this chapter, the applications of satellite navigation systems in the flight test environment are discussed. Due to the scope of the present dissertation we will focus our discussion on GPS applications only. Information about other GNSS systems, with an overview of present and future applications can be found in the references [1, 2, 3].

3.2 ACCURACY CLASSES

With current GPS receiver technology, the following four basic positioning techniques are possible:

- SPS GPS positioning. Accuracy in the order of 100 m is guaranteed (C/A code, L1). This technique suits the requirements of the low accuracy class applications of flight testing, such as the evaluation/ certification of medium-range navigation sensors and systems (VOR/DME, FMS, NDB, ADF, etc.).
- PPS GPS positioning, with an accuracy of 10 – 20 m. These techniques can meet some of the medium accuracy application requirements: air-to-air applications (including en-route cruise missile testing), most EW trials and air exercise/training.
- Differential code range GPS positioning, with an accuracy of 1 to 5 m. This technique fulfils the requirements of the medium accuracy class of flight testing: air-to-surface applications (including terminal cruise missile testing), fly-over-noise measurements and remote sensing flights.
- Differential carrier range GPS positioning, with centimetre to decimetre accuracy. This technique can meet the requirements of the high accuracy flight test applications: the evaluation/certification of an automatic landing system and the determination of the take-off and landing performance of an aircraft.

3.3 THE PIONEERING OF GPS RANGE PROGRAMS

During the 80's, the United States Department of Defense (US-DoD) established a three-service committee to evaluate the potential of a GPS-based range-tracking system. A preliminary study was conducted in order to determine the requirements of a generic Time and Space Position Information (TSPI) system for testing and combat training exercises (Table 3-1).

Table 3-1: TSPI Requirements [4]

TEST PARAMETER	A – A			A – S			CRUISE MISS.		EW	Air Exercise and Training
	A/C	DRONE	MISS	A/C	DRONE	MISS	Execute	Terminal		
Real-Time Accuracy (1σ):										
Position (x, y), (z), ft	25	25	25	12 – 25	12 – 25	5	25	10	15 – 25	50 – 200
Velocity (x, y), (z) fps	3	3	3	3	3	3	1	3	3	5 – 15
Timing (msec)	100	100	100	50 – 100	50 – 100	100	100	100	100	50 – 100
Data Rate (#/sec)	10 – 20	10 – 20	10 – 20	10 – 20	10 – 20	10 – 20	10 – 20	10 – 20	10	1 – 10
Post-Test Accuracy (1σ):										
Position (x, y), (z) ft	<25	3 – 25	3	5	5	1 – 5	>25	>10	15	>50 – 200
Velocity (x, y), (z) fps	3	3	3	3	3	3	1	0.1	3	5 – 15
Scoring Accuracy (ft – 1σ Circ.)	–	–	3	–	–	1 – 6	–	10	–	10
No. Test Articles	1 – 12	1 – 12	1 – 12	5 – 25	5 – 25	5 – 25	5 – 10	5 – 10	1 – 50	1 – 90
Coverage:										
Attitude – kft	0 – 100	0 – 100	0 – 100	1 – 75	1 – 75	1 – 75	0.1 – 100	0.1 – 100	0.1 – 100	0.1 – 100
Distance – nm (diameter)	60	60	60	30	30	30	VAR	VAR	30 – 60	30 – 60

A-A = Air-to-Air; A/C = Aircraft; A-S = Air-to-Surface; EW = Electronic Warfare.

Twenty-two ranges were surveyed, and after 1.5 years it was concluded that GPS range equipment could satisfy 95% of the range requirements for TSPI. It was unanimously agreed that the application of GPS to range tracking had cost and technical advantage over existing range tracking techniques (Figure 3-1).

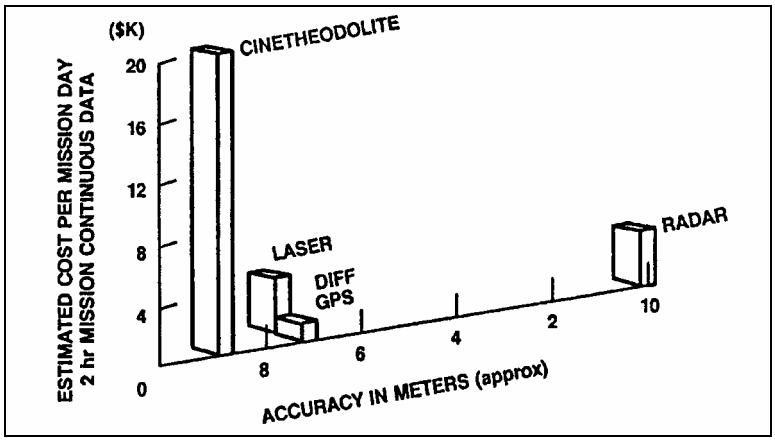

Figure 3-1: Cost versus Accuracy of TSPI Systems [4].

3.4 DGPS RANGE SYSTEMS

TSPI data can be obtained by using on-board GPS receivers or frequency translators. A receiver processes the satellite signals and outputs either raw or corrected TSPI data, which can be recorded or transmitted to the ground through a telemetry data link. A translator receives the GPS signals and retransmits them on a different frequency for detection and processing on the ground. Translators use up telemetry bandwidth rapidly because at least two megahertz is needed for each simultaneously operating translator. A receiver system uses less than 100 kHz of bandwidth, thus permitting large numbers of users to be active at the same time. Receivers are good candidates for aircraft and test articles with high recovery rates so that the GPS equipment can be reused. Being simpler, smaller, and less expensive than receivers, translators are well suited for small test articles that are expendable or likely to exhibit a high attrition rate such as missiles and drones. In general, the type of on-board equipment chosen for a particular application will be dictated by performance requirements, form-fit factors, and cost relative to the test article itself [5].

3.4.1 Reference Station

The general architecture of a DGPS Reference Station (RS) suitable for flight testing is shown in Figure 3-2.

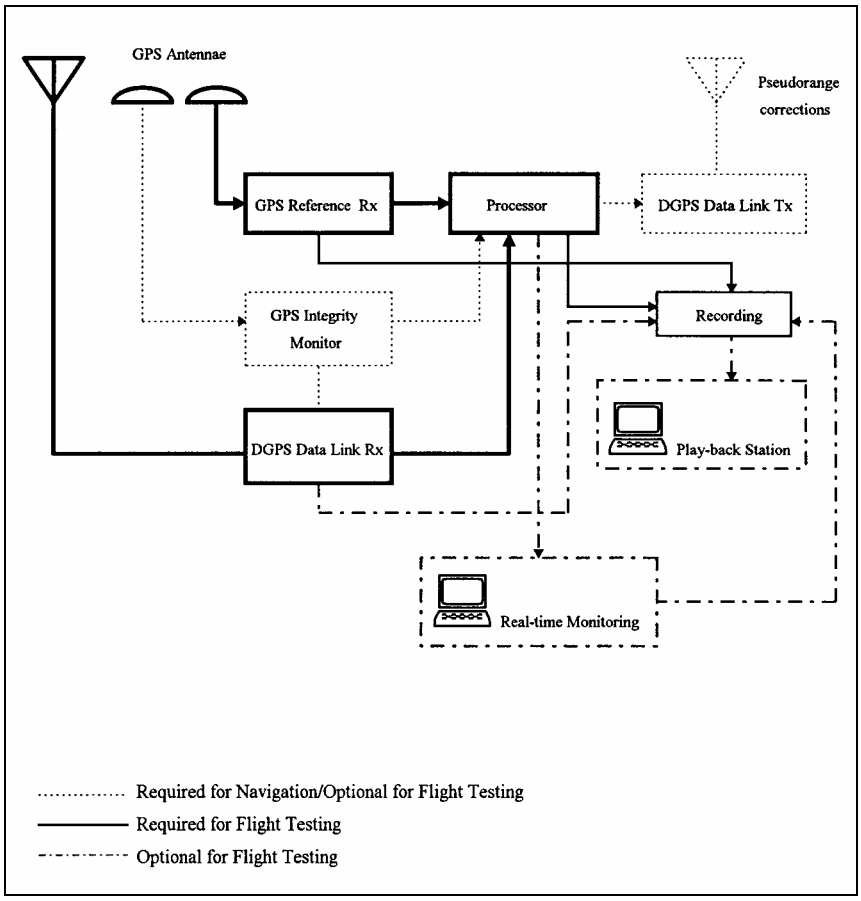

Figure 3-2: DGPS Reference Station.

Two receivers are used at the RS to increase the station reliability and to provide station integrity. Nominally each receiver will track all satellites in view in order to assure that differential corrections are determined for all satellites. The RS should be able to broadcast data for all satellites in view. If SPS

equipment is used, the broadcast can be unencrypted. If PPS equipment is used, the transmission of SA corrected errors requires the use of an encrypted data link. Methods have also been developed to broadcast SA-uncorrected DGPS data from PPS RS, thus allowing broadcast over unencrypted data links. Additional details may be found in STANAG 4392. If the on-board unit is a translator, the processing (determination of *X, Y, Z* state vector) must be carried out at the ground station (mostly by Kalman Filter). In the case of an airborne receiver the processing can be either carried out on-board the aircraft or at the ground station. The first option is preferred when redundant positioning data are available from other sensors, so that the resulting *X, Y, Z* solution can be computed and recorded in the aircraft, provided that differential corrections are transmitted from the RS (i.e., a bi-directional data link is used).

3.4.2 Translator Systems

A range system concept employing a translator is shown in Figure 3-3. The carrier for the retransmitted signal is derived from the translator local oscillator and used at the receiving site to aid signal tracking and to correct translator local oscillator error. Vehicle position and velocity are then estimated using special processing algorithms. Two types of translators, analog and digital, are suitable for test range applications. These are described in the following section.

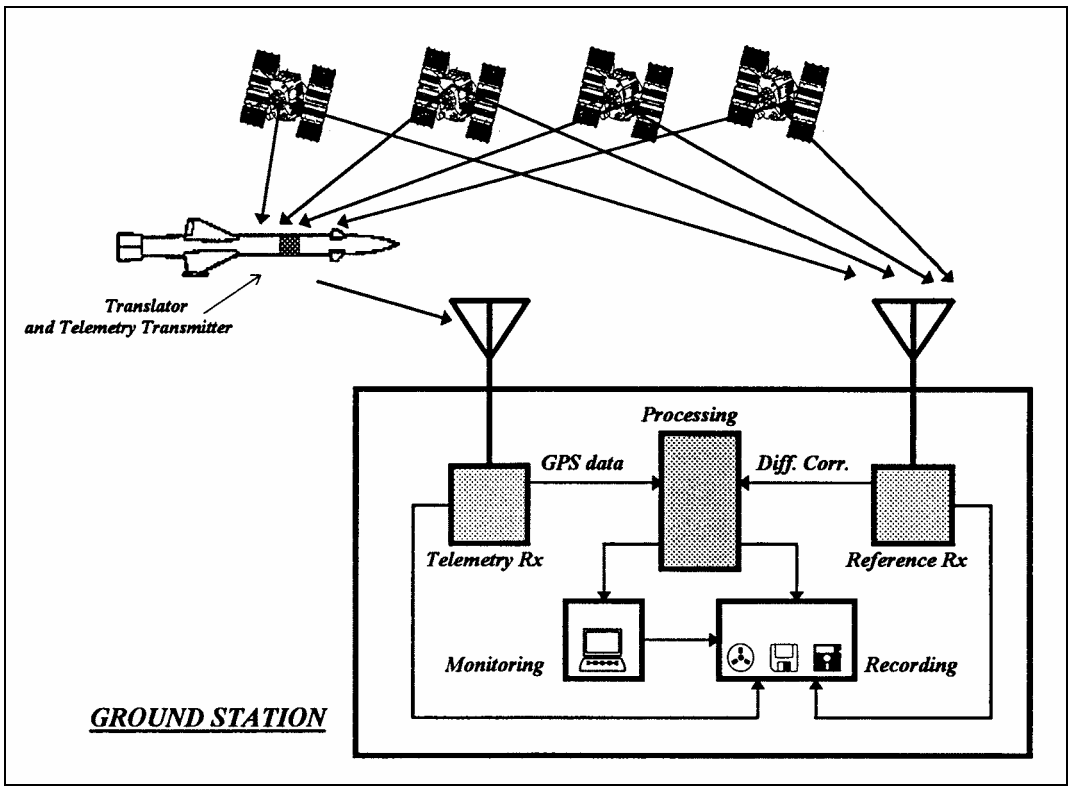

Figure 3-3: Translator System Concept.

3.4.2.1 GPS and Translator Signals

The GPS satellites continuously broadcast on two L-band frequencies, 1575.42 MHz (L1) and 1227.6 MHz (L2). Superimposed on these carriers are two coded signals unique to each satellite: a precision code (P-code) pseudorandom noise (PN) signal with a 10.23 MHz chip rate and a coarse/acquisition code (C/A code) PN signal with 1.023 MHz chip rate. The L1 frequency contains both the P-code and C/A code while the L2 frequency contains the P code only. Superimposed on the P and C/A codes are 50 Hz chip

rate navigation data containing the 'navigation message' (see Annex A for more detailed information about GPS signal structure). A typical receive level in a 1.5 MHz bandwidth for the L1 C/A signal at a ground station is -160 dBW from a 0 dBi antenna. When a translator is employed, the GPS signals are degraded by the translation process and by sidebands on the output carrier which may induce noise at the receiver input. The transmitted signal-to-noise ratio, S/N_t, may be expressed as [6]:

$$S/N_t = S/N_{sr} \cdot \left(\frac{1}{N_1}\right) \cdot \left(\frac{1}{N_2}\right) \tag{3.1}$$

where:

S/N_{sr} = translator received signal-to-noise ratio;

N_1 = degradation due to the translation process; and

N_2 = receive system degradation due to transmitter induced noise.

Accurate trajectory measurements can be obtained even when S/N_t is as low as – 30 dB in a 1.5 MHz bandwidth since there is a recovery of 40 dB or more after the signals are despread.

The output spectrum of a translator can be characterised as band-limited noise so that the signal-to-noise ratio at the remote acquisition site, S/N_{sr}, is:

$$S/N_{sr} = S/N_t \left(\frac{P_R}{P_R + P_N}\right) \tag{3.2}$$

where:

P_R = power of the translated signal at the receiving system input; and

P_N = receiving system noise power referenced to the receiver input.

3.4.2.2 Analog and Digital Translators

Both analog and digital translators commonly operate with the L1 C/A signals. The analog translator simply receives the satellite signals and retransmits them on another frequency. The first generation analog translator used conventional heterodyne techniques and class A amplification to ensure that nonlinearities did not introduce phase noise on the satellite signals. A second generation miniaturised analog translator has been developed using limiting and class C amplification to reduce power requirements [6].

The digital translator is applicable to situations where the transmitted data must be encrypted or when telemetry and GPS signals are to be simultaneously relayed on the same link. However, the digital translator requires higher transmitted power than the analog translator for equivalent performance.

When analog or digital translator signals are transmitted at S-band, standard telemetry equipment at many test ranges can be used. The S-band signals can be received and down-converted to a suitable record frequency, and possibly wideband recorded and played back when a proper Time Base Error Corrector (TBEC) is employed. Field test results indicate TBEC equipment may reduce standard recorder time base error sufficiently to allow GPS receiver lockup during playback using conventional 4 MHz telemetry recorders. The acquisition site and the central processing site on the ground may not to be collocated. Minimum acquisition site equipment (telemetry receiver, local oscillator error correction, etc.) is needed when data are relayed for processing at a central facility. When an acquisition site is configured with a GPS

receiver for processing translator signals, a GPS reference receiver, and common frequency and time references, trajectory estimation may be feasible even using data from only three satellites. The advantages of using a translator (analog or digital) are:

- It is less complex than a GPS receiver, which can reduce cost, size, and weight of this component up to an order of magnitude;
- It shifts the computational capability to ground base, thus allowing this capability to increase, and enabling Time-to-first-fix (TTFF) of typically less than 5 seconds for range safety applications;
- It allows mission replay, and it gives the system inherent differential GPS accuracy; and
- It allows tracking under very high g-levels.

There are also some disadvantages when using translators, but they are not a factor for many applications; these disadvantages are:

- Only a limited number of targets can be tracked simultaneously because of translator retransmission bandwidth requirements;
- TSPI is not directly available for use by the vehicle; and
- Recording on-board the vehicle is typically impossible, making a line-of-sight relationship to the master station mandatory (i.e., if loss of satellite signal track or masking of the GPS/Telemetry antennae occurs, position data will be totally lost).

Over the last fifteen years many translators have been built and tested and new processing techniques are now being investigated to increase the performance of existing equipment at the ranges. More information about GPS translators and techniques for receiving, processing, and recording translated GPS signals using standard telemetry equipment can be found in the literature [6, 7].

3.4.3 Airborne Receivers

The airborne GPS receiver can be either podded or installed in the aircraft avionics compartment. In both cases the same concept applies. There are many possible configurations for both the on-board/podded equipment and the Reference Station with supporting test facilities on the ground. Airborne and ground equipment selection criteria are mainly dictated by the task of the test mission and cost-vs.-accuracy considerations.

A possible layout is shown in Figure 3-4. The on-board GPS receiver together with the other data sensors and equipment carried on the aircraft for recording information, processing and transmitting/receiving data are commonly referred to as the airborne Flight Test Instrumentation (FTI).

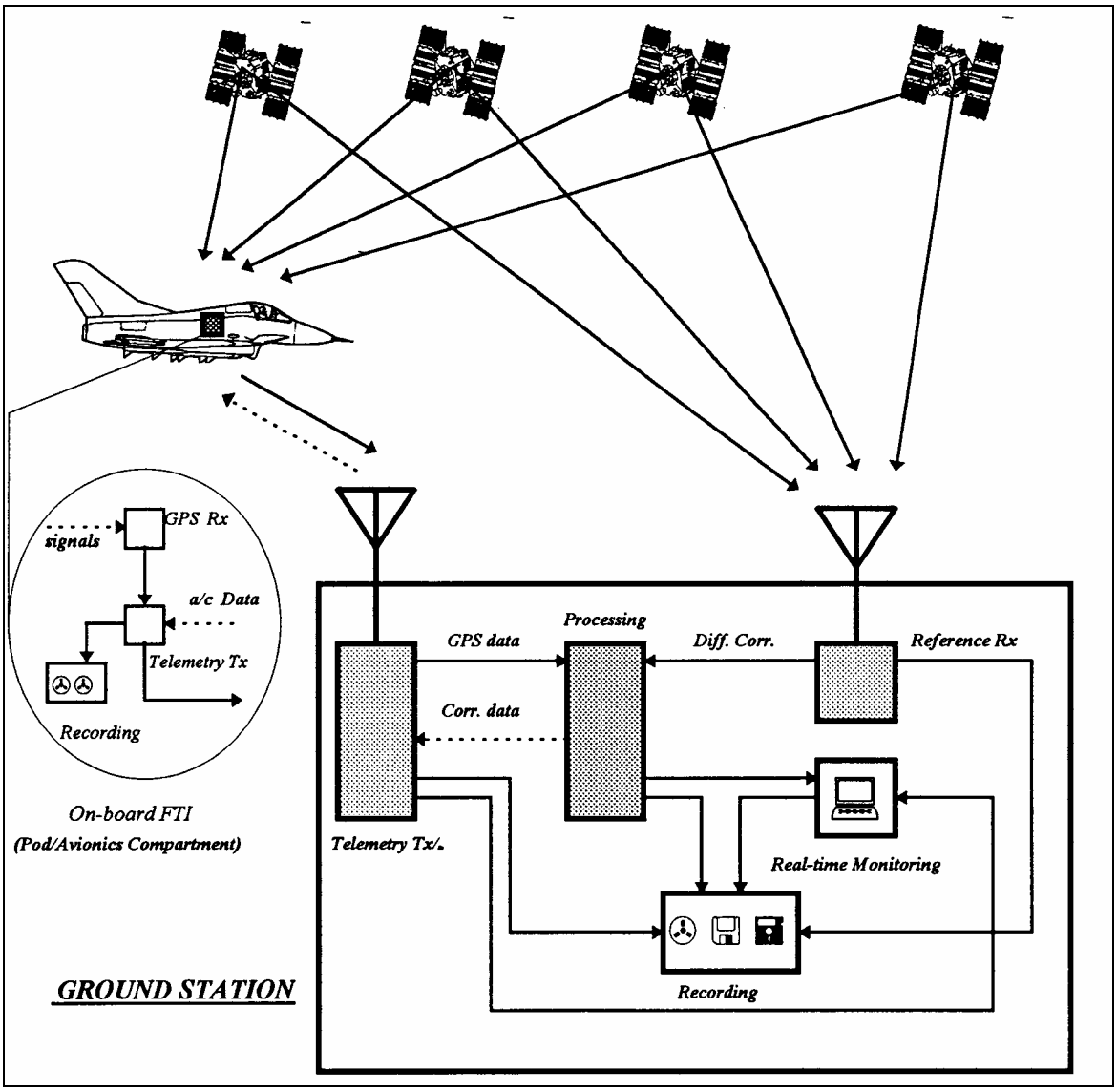

Figure 3-4: Receiver and Ground Station Concept.

The receiver for use on aircraft have to be designed to minimise reacquisition time (typically multi-channel C/A or P(Y)-code receivers are used) after loss of satellite signals. GPS signal loss occurs for a variety of reasons associated with either extremely high dynamics or platform shading between the antenna and the satellite. In order to minimise the loss of signals different techniques can be used. The strategy usually adopted consists of using a dual antenna system. Each antenna has a hemispherical coverage pattern; so the antennae "look" in opposite directions. In this configuration, the upper antenna looking at the satellite constellation is used most of the time. The lower antenna (looking downward), which could be receiving the interfering multipath signal, should be "de-weighted" in the selection process.

As already mentioned, it is also possible to integrate GPS measurements with information provided by other sensors (typically INS, with a barometric altitude input). In this configuration and for both real-time and post processing applications, most of the processing can be carried out on board the aircraft. There are many advantages related with this solution. Possible flight test applications of integrated DGPS/INS systems are discussed in Chapter 10.

3.5 REFERENCES

[1] Riley, S. and Daly, P. (1993). "Performance of the GLONASS P-code at L1 and L2 Frequencies". American Institute of Navigation (ION) – Satellite Division. Proceedings of the 6th International Technical Meeting.

[2] Ochieng, W.Y. (1997). "GNSS Design". MSc Lecture Notes. Institute of Engineering Surveying and Space Geodesy (IESSG) – University of Nottingham (UK).

[3] Kayton, M. and Fried, W.R. (1997). "Avionics Navigation Systems". Second Edition. John Wiley & Sons (USA).

[4] Joint Program Office (JPO). (1991). "NAVSTAR GPS User Equipment, Introduction". Public Release Version. US Air Force Space Systems Division, NAVSTAR-GPS Joint Program Office (JPO). Los Angeles AFB, California (USA).

[5] Parkinson, B.W. and Spilker, J.J., Jr. Editors. (1996). "Global Positioning System: Theory and Applications – Volume II". Progress in Astronautics and Aeronautics. Vol. 163. Published by the American Institute of Aeronautics and Astronautics.

[6] McConnell, J.B., Greenberg, R.H. and Pickett, R.B. (1989). "Advances in GPS Translator Technology". American Institute of Navigation (ION) – Satellite Division. Proceedings of the 2nd International Technical Meeting.

[7] Brown, A.K. (1992). "Test Results of the Advanced Translator Processing System". NAVSYS Corporation Technical Paper, Colorado Springs (CO), USA.