Chapter 3 – SYSTEM DEVELOPMENT

3.1 GROUND-BASED INTERROGATION SYSTEMS

A system for interrogating FBG sensors has been designed and implemented for both ground and flight data acquisition applications. It has been designed to operate based upon a method first developed at NASA Langley (Hampton, Virginia) using OFDR to interrogate multiple Bragg gratings multiplexed onto a single fiber. [12, 13] This unique method allows for hundreds of Bragg sensors, spaced 1/2 in apart, to be located on a single fiber. NASA Dryden has taken this technology, which existed only in the laboratory, and has developed practical systems featuring compact size, robustness, and increased sample rates.

Ground-based systems (Figure 3-1) were developed initially to process fibers attached to sub-component specimens tested within the Flight Loads Lab (FLL) located at NASA Dryden; specimens such as composite and metallic panels, composite tubes, pressure vessels, a sub-scale simulated heat shield and the like. Several laboratory generations of the system have yielded a relatively small, quick, multi-fiber design that has been migrated to a flyable version.

Figure 3-1: Ground-Based 4-Fiber Interrogation System.

3.2 FLIGHT-BASED INTERROGATION SYSTEMS

The flight version of the system has been designed to operate aboard NASA Dryden's Ikhana aircraft, which is a modified General Atomics Predator B (Figure 3-2). This system performs much the same way as the ground version, featuring similar performance specifications while operating within the flight conditions of this aircraft; which include vibration, low temperatures, and elevated altitudes.

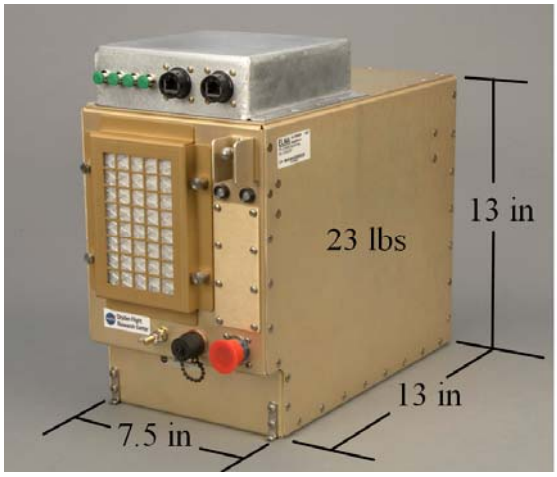

NASA Photo ED07-0240-08

NASA Photo ED07-0038-045

Figure 3-2: Flight 4-Fiber Interrogation System and Predator B Aircraft.

Throughout the remainder of this section, reference to "the system" will refer specifically to the flight system unless called out otherwise. The components, discussed later, of both systems are identical with the exception of the system enclosure. The flight system has a uniquely designed flight enclosure to satisfy system component environmental specifications while operating within the Ikhana aircraft. The ground-based system utilizes a Commercial-Off-The-Shelf (COTS) compact Peripheral Component Interconnect (cPCI) enclosure.

Designing a flyable version of the ground system was considered when an opportunity surfaced on-board NASA Dryden's Predator B aircraft. The requirements of such a flight system would start with the measurement of strain distribution along the leading and trailing edge of the 60 ft wing span. Other requirements included a sample rate of 20 sps, +/-3500 microstrain, strain range, 4 fiber channels, 20 ft fiber sensing length, 30 lb maximum weight, 28 Vdc operation, and Ethernet interface. The environmental requirements were to meet NASA's Curve A for sine wave vibration, -60°F to +110°F operating temperature range, and altitude of 60 K ft (Figure 3-3a).

The sub-components that make up the system are as follows: c-band tunable laser, optical network, Optical-to-Electrical (O/E) amplifier/converter, high speed Analog-to-Digital (A/D) converter, and host CPU with large mass storage capacity (Figure 3-3b).

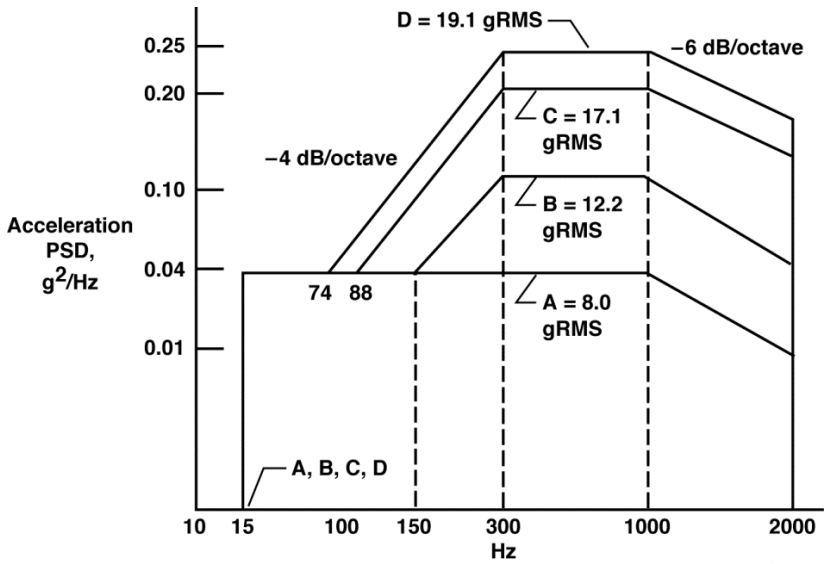

a) Curve-A Random Vibration Standard.

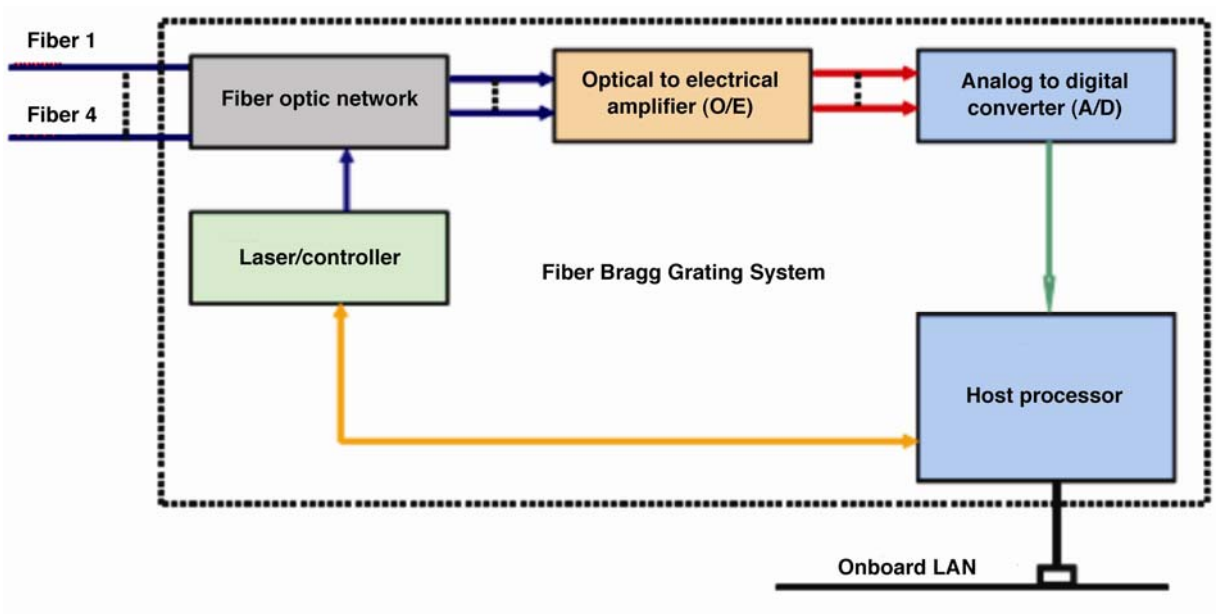

b) System Block Diagram.

Figure 3-3: Environmental Qualification Requirements and System Design for the Ikhana Flight System.

The tunable laser is a COTS available, swept class-C laser capable of greater than +8 dBm output power and sweeps over a 30 nm range at speeds of up to 2000 nm/s. The laser can be used to interrogate lengths up to 328 ft, which is its coherence length. The unit resides on the cPCI bus and is configured, controlled, and monitored via the host cPCI processor.

The optical network and the O/E amplifier were designed to interrogate 4 sensor fibers each capable of sensing approximately 20 ft of 1/2 in spaced Bragg gratings, yielding 480 gratings per fiber or 1920 gratings per system. The O/E amplifier module combines negatively biased photodiodes with transimpedence

amplifiers generating an electrical signal representative of the reflections from the Bragg gratings. The four amplified electrical signals are sampled by a 25 MHz, 4-channel 12-bit A/D cPCI card then buffered into the host CPU for data processing.

The host processor is an Intel-based Core Duo processor running at 2.1 GHz. The processor provides control and management to the tunable laser and data acquisition control for digitized data from the A/D. The processor also provides data processing and storage capability as well as data broadcast via the Ethernet connection.

The processing software, which implements the Dryden method mentioned earlier, can be configured to operate in 2 or 4 fiber mode. In the 4-fiber mode, the system can achieve sample rates of 30 sps, and while in its 2-fiber mode, 60 sps. The software can be configured to operate stand-alone or be controlled by a remote computer via the Ethernet connection. The system components were assembled within a 3/4 ATR flight enclosure powered from 28 Vdc aircraft power. The final flight system had dimensions of 7.5 in. by 13 in. by 13 in. and weighted 23 lb as shown in Figure 3-2.

As mentioned earlier, environmental testing was performed to qualify it to operate on-board Ikhana. The system was subjected to multiple 8 g shocks and sinusoidal vibration of 1.1 g peak up to 500 Hz. Elevated altitude testing of 60 K ft in conjunction with -60°F temperatures as well as elevated temperatures of 110°F to simulate the aircraft stationary on the tarmac, operating.