Annex A – INTRODUCTION TO AIRBORNE LASER SYSTEMS

A.1 LASER RANGE FINDERS

For many military applications, such as the delivery of unguided bombs and gunnery, it is essential to be able to measure range accurately. There are several ways in which this can be done. The traditional method is to use an optical rangefinder. This either measures the angle subtended at a distant point by a fixed optical baseline, or measures the angle subtended at the operator by a target of known size. In airborne systems the problem is usually complicated by the continuously changing geometry between the aircraft and a point on the target, and the implied requirement for rapid measurement techniques. By using standard sensors within the aircraft system, the range between aircraft and ground targets can be estimated by knowing the altitude of the aircraft and the depression angle between the horizontal and a line to the target, or by measuring the rate of change of this angle and knowing the aircraft velocity. All these methods have limited accuracy and most of them are not easily integrated into any automated weapon system.

A more suitable technique used in conventional radar, is to transmit a pulse of radiation. After reflection and reception, the time of flight of the pulse is then measured. This is a direct measurement of range. Unfortunately, microwave radars suffer low performance at low grazing angles, which occurs at level flight at low altitudes. In addition to this, land targets are rarely isolated from other reflectors within the radar beam and these give rise to spurious returns which can lead to ranging errors in conventional radar.

To overcome these effects conventional radar systems require sophisticated transmission and return signal processing. Lasers, on the other hand, with their narrow beams offer an immediate advantage with simpler signal processing and better target definition. They can also produce very short pulses which give excellent range resolution (ΔR). Range resolution is given by:

$$\Delta R = c\tau/2 \tag{A.1}$$

where τ = pulse width. For example, a pulse width of l0 ns will give a range resolution of about 1.5 metres. A particularly demanding ranging application which has received considerable attention and which illustrates the advantages of laser ranging is the measurement of range from a high speed low-level aircraft to a ground target. Figure A-1 illustrates the obvious errors which can arise over undulating ground owing to the error in assessing the true aircraft to target height.

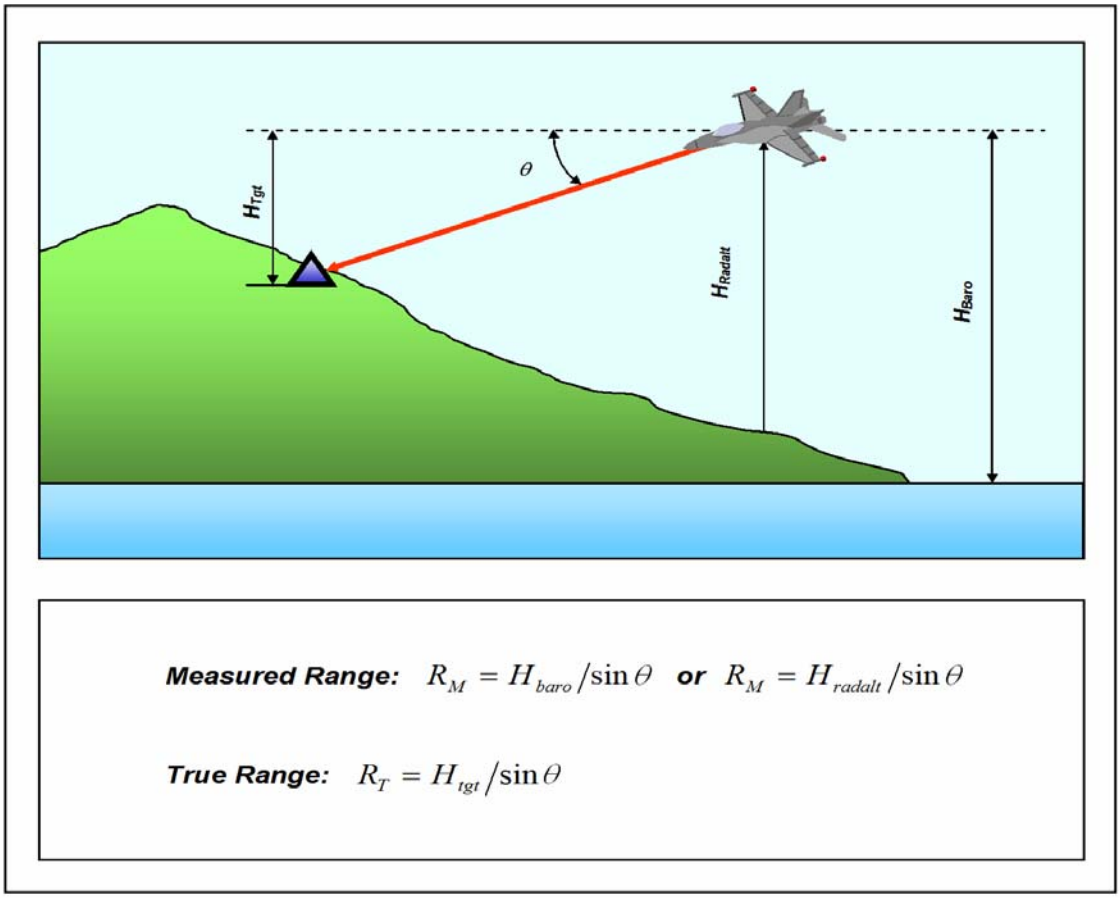

Figure A-1: Ranging Error Obtained by Scaling Aircraft Height Measurements.

The choice of laser and receiver for a system will depend, to a large extent, upon the application. Generally, for rangefinders, the most important parameter is the maximum range of operation. Laser Rangefinders (LRFs) usually operate at ranges between 7 and 15 km. A considerably large output power is required to operate much beyond this range. Early systems used ruby lasers but these have now been discontinued in favour of the higher efficiency pulsed Nd:YAG systems. With pulsed systems high output power, of the order of MW, is required since it is the peak power output of each pulse that determines the maximum range. The majority of LRFs, in operation at the present time, use an optically pumped Nd:YAG laser as the source of the transmitter power (λ = 1.064 μm), but eye-safe Er:glass (λ = 1.550 μm) and CO_2 (λ = 10.6 μm) laser systems are also being employed.

The architecture of a typical LRF system is shown in Figure A-2 [1]. The transmitter is shown in Figure A-2(a) and contains an electro-optically Q-switched laser.

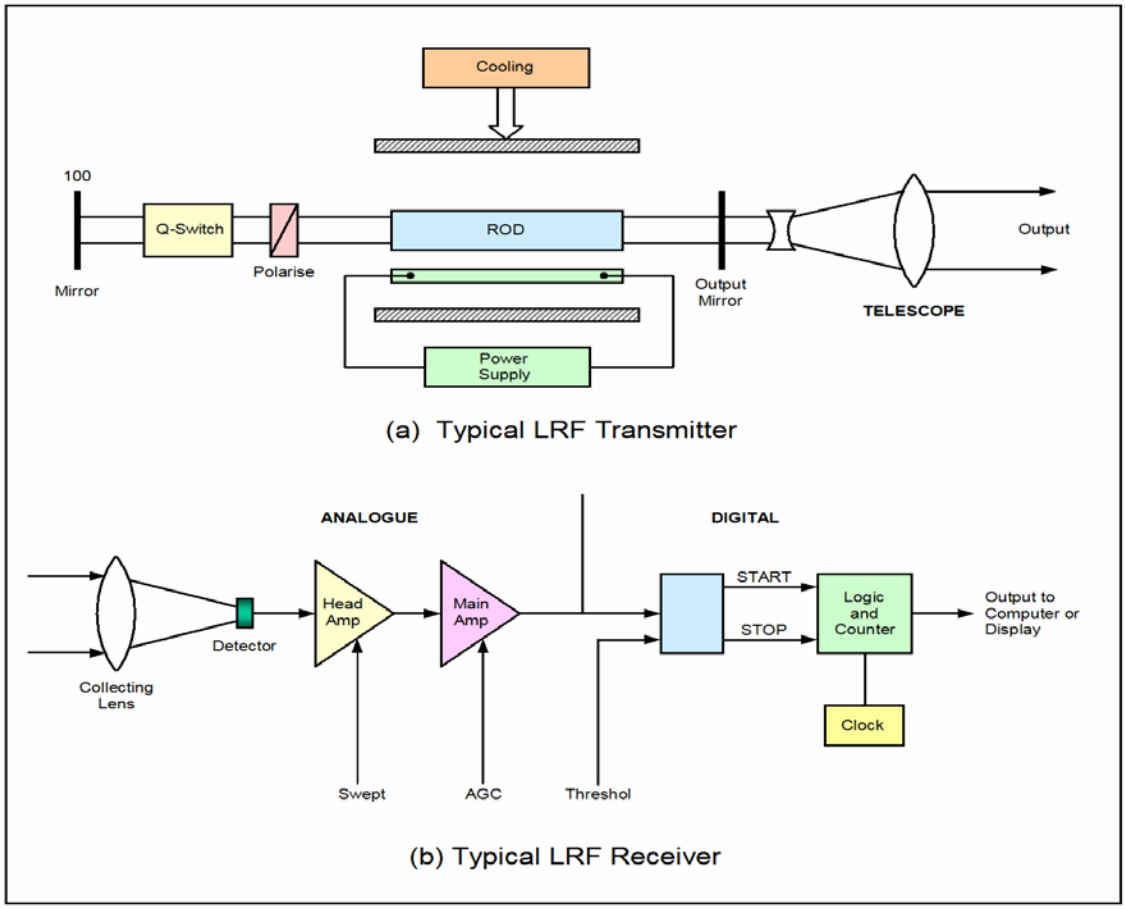

Figure A-2: Typical Laser Rangefinder Architecture.

This type of laser can operate up to 50 pps and produce output pulses with about 10 MW peak power and pulse widths of only 10 to 15 ns. The beam divergence from the laser may be several milliradians and in order to obtain accurate target definition a simple collimating telescope has been added, which would reduce this to less that 1 mrad.

Figure A-2(b) shows a typical LRF receiver system. The radiation scattered from the target is collected by the receiver which may be a conventional mirror or lens system. The field of view is restricted so that it only just encompasses the transmitted beam, in order to reduce unwanted signals from the natural illumination of the target area and also to improve the security of the overall system. The receiver could also incorporate a narrow pass-band spectral filter centred on the laser wavelength to further reduce the standing background signal which contributes to the overall system noise. The electronics for the receiver are shown in block diagram form and consist of two parts:

- An analogue section, which amplifies the return pulse whilst retaining its shape; and
- A digital section, which performs logical timing processes and calculates the range.

Multiple pulse returns are obtained, either because the beam is scattered by the atmosphere, from foliage between the transmitter and target, or from radiation “spilling” over the target and hitting the background. In order to select the correct pulse, either first pulse or last pulse logic can be used. For air-to-ground operations atmospheric backscatter and sightline obscuration are the most likely problems and last pulse logic is favoured. After selection, the correct pulse is fed to a counting circuit which determines the time of transmit, and hence the range.

A.2 TARGET DESIGNATORS AND GUIDED WEAPONS

A Laser Target Designator (LTD) is an accurate pointing system which provides the pulsed laser source and the precision optics and stabilisation required to accurately shine a laser beam on a target. A Laser Guided Weapon (LGW) generates an electric signal (photons converted into electrons) when laser light is received at the wavelength and with the pulse coding of the LTD system, consequently a portion of the laser light reflecting off of the target is "visible" to the weapon. This provides signals on which the LGW can "home" toward the target by actuating its aerodynamic surfaces. Obviously, the pointing accuracy of the laser is most important, as any laser error degrades the weapon accuracy. In many instances, a slightly modified LRF (pulse coding) serves admirably as a target designator, and it has the added advantage of simultaneously providing slant-range to the target.

As already mentioned, the LGW (missile or bomb) does not follow the beam emitted by the designator (as with laser beam riders), but automatically tracks the signal reflected from the target. Currently, two different LGW guidance "strategies" are adopted:

- **Bang-Bang Guidance**, in which the LGW only senses a position error, and the control fins are driven to the limit of their travel (generally by high-pressure gas), regardless of the magnitude of the error (i.e., the control fins are either at the trail position or full deflection during guidance); and
- **Proportional Guidance,** in which the LGW seeker continuously tracks the maximum of the reflected laser energy and the LGW computer directs towards the target by actuating the weapon aerodynamic surfaces, giving commands proportional to the measured offset.

Dive, level and loft types of attacks are all possible with Laser Guided Bombs (LGB) and a variety of profiles would be available with airborne Laser Guided Missiles (LGM). In general, two main categories of attacks with LTD/LGW can be distinguished:

- **Self Designation Attacks**, in which the aircraft acts as illuminator for the own carried LGW and laser illumination is automatically controlled by the LTD, manually controlled by the Weapon System Operator (WSO), or by the aircraft computers (e.g., using a pre-planned counter to be chosen between various mutually exclusive possibilities). An example of a typical LGW Self Designation mission profile is reported in Figure A-3(a).
- **Co-operative Designation Attacks**, in which a ground Forward Air Controller (FAC) (or an aircraft) perform illumination with an LTD for the LGW carried by an(other) aircraft. Automatic steering functions are often implemented in co-operative profiles. In these cases, aircraft is forced to pass tangent to the Target Lethal Range (TLR) according to pre-planned steering laws. Also in this case, the laser can be operated by a pre-planned counter or manually. An example of a typical Co-operative mission profile is shown in Figure A-3(b).

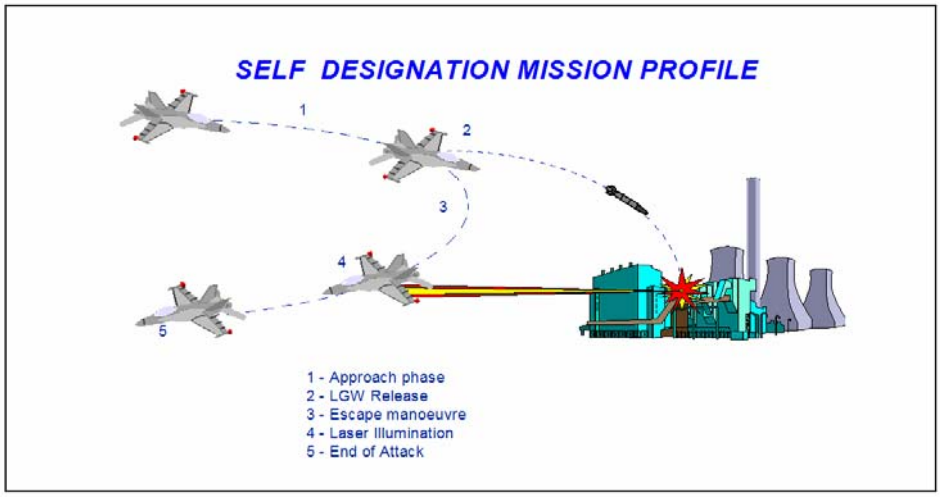

(a) Self Designation Attack.

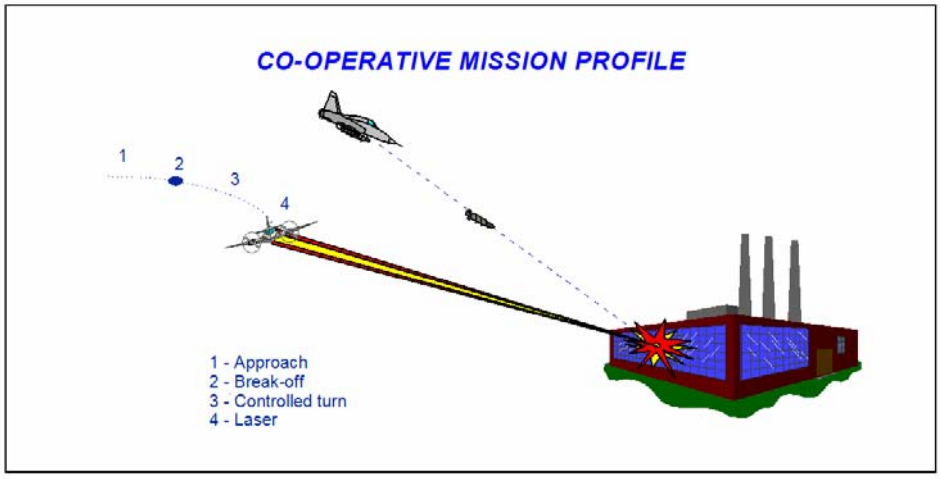

(b) Co-operative Attack.

Figure A-3: LTD/LGW Mission Profiles.

A.3 LASER RADARS

Laser radars can be grouped according to the type of measurement made by the laser radar, the detection technique, the type of interferometer employed in a coherent laser radar (if appropriate), the modulation technique, the demodulation technique, the type of laser or the wavelength of operation, the function performed, the type of data collected, or the data format. In addition, laser radar can be classed as monostatic or bistatic, depending on whether it uses a single aperture to transmit and to receive or separate apertures. Some of these groupings are summarized in Table A-1 [2].

Table A-1: Types of Laser Radars

Types of Lasers (Typical)	Carrier Wavelength
$C0_2$	9.2 µm -- 11.2 µm
Er:YAG	2 µm
Raman Shifted Nd:YAG	1.54 µm
Nd:YAG	1,06 µm
GaAlAs	0.8 µm -- 0.904 µm
HeNe	0.63 µm
Frequency Doubled Nd:YAG	0.53 µm

Detection Technique	Interferometer Type	Modulation Technique
Direct Detection	Not Applicable	Pulsed Amplitude Modulation (AM)
Coherent Detection	Heterodyne Homodyne Offset Homodyne	Pulsed Amplitude Modulation (AM) Frequency Modulation (FM) Hybrid (AM/FM, Pulse Burst) None (CW)

Functions	Measurements
Tracking Moving Target Indication (MIT) Machine Vision Velocimetry Wind Shear Detection Target Identification Imaging Vibration Sensing	Amplitude (Reflectance) Range (Time delay) Velocity (Doppler Shift or differential range) Angular Position Vibration Spectra

The name given to a particular system is seldom sufficient to completely identify what it does and is certainly not sufficient to identify how well it performs.

As can be seen in Table A-1, there are many types of laser radars. The variety found among laser radar systems is one of the primary reasons for their versatility. Unfortunately, it can also create some confusion. For example, wavelength-dependent technological limitations frequently prevent simple parametric extrapolation of performance from one type of system to another. These limitations can make routine performance at a one laser wavelength well beyond the state of the art (and possibly beyond fundamental physical limitations) at another wavelength. Extreme care must be exercised when extrapolating the performance of one type of laser radar to another.

The use of very wavelength specific technology and components represents a significant difference from passive optical systems or conventional radar systems. The availability of laser sources makes only a finite

(and small) number of wavelengths practical alternatives for laser radars. Passive optics and conventional radars – Radio Frequency (RF) through Millimeter-Wave (MMW) – can select the wave band to optimise performance without major changes in technology. Laser radars often must change technologies completely (e.g., electrically pumped gas lasers versus optically pumped solid-state lasers) to effect even small changes in operating wavelength.

The concept of operation of a laser radar (LADAR) is identical to that of a conventional radar. Laser radar transmits a signal that is reflected by a target and then collected by the laser radar receiver. Range to the target is determined by measuring the round-trip time of the reflected light. Radial velocity of the target is measured by either determining the Doppler shift of the reflected light or by making two (or more) range measurements and calculating the rate of change of range.

In direct detection laser radar (Figure A-4), the received optical energy is focused onto a photosensitive element that generates a voltage (or current) that is directly proportional to the optical power that strikes it. This process is identical to a conventional, passive optical receiver or to a typical laser rangefinder (described before).

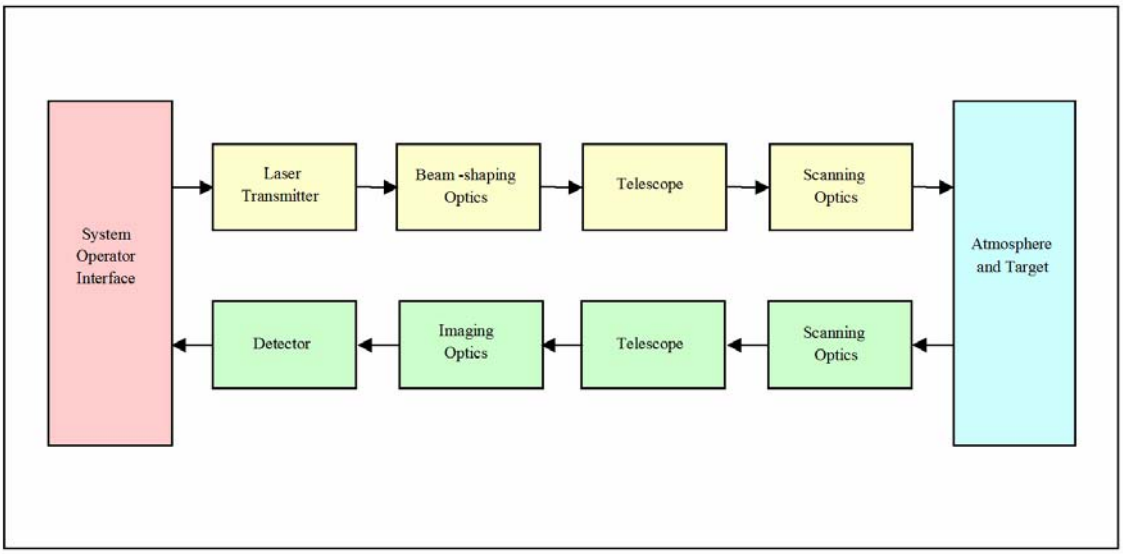

Figure A-4: Block Diagram of a Direct Detection Laser Radar.

A block diagram, of a typical heterodyne (or coherent) detection laser radar is shown in Figure A-5. An optical signal is generated by the transmitter laser. The divergence and beam diameter of this optical signal are then matched to the rest of the system by beam-shaping optics. This matching is optional because some systems are designed to operate with the unmodified transmitter laser beam. In a monostatic system, the transmitted laser signal enters a transmit-to-receive (T/R) switch. The T/R switch permits the laser radar transmitter and receiver to operate through a common optical aperture. The laser radar signal then enters the beam expander or output telescope and the scanning optics that direct the optical signal to the target.

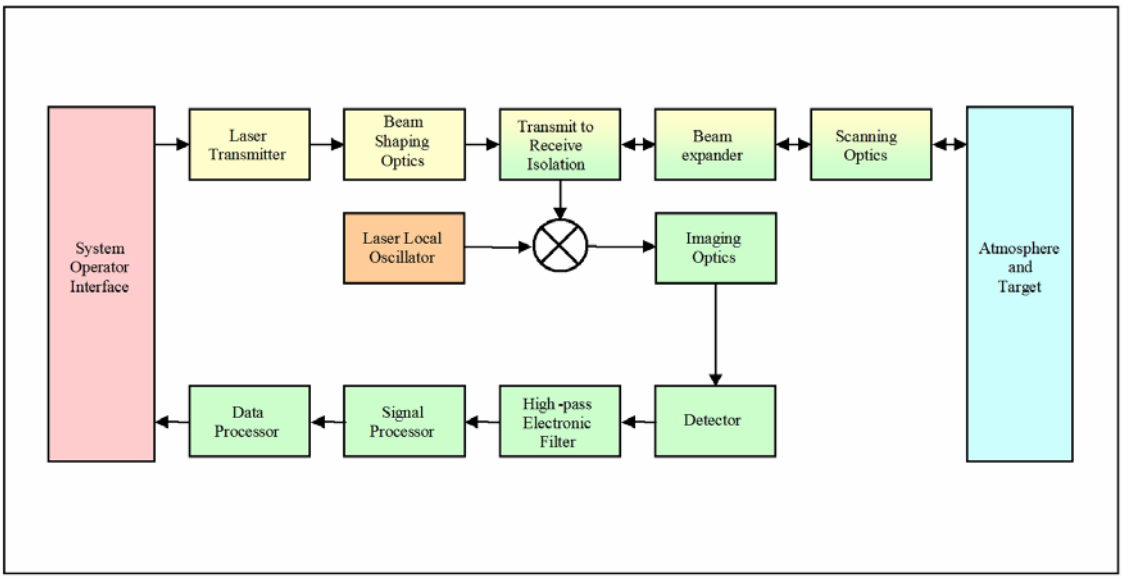

Figure A-5: Block Diagram of a Coherent Detection Laser Radar.

In a monostatic system, radiation reflected from the target is collected by the scanning optics and the beam expander, which now acts as an optical receiver. The T/R switch directs the received radiation to an optical mixer, where it is combined with an optical reference signal, which is the local oscillator. The combined signal is then focused onto a photosensitive detector by the imaging optics. The photosensitive detector generates an electrical signal in response to the received optical signal. The electrical signal is then high-pass filtered to remove any low-frequency components, such as those from background sources and from the local oscillator-induced dc signal. The high frequency components of this electrical signal contain the target information obtained by the laser radar. Metric information is then extracted from the electrical signal by signal and data processors.

In a bistatic system, the T/R switch is omitted. A separate beam expander and scanning optics are then dedicated to the receiver. The remainder is identical to a monostatic system, as previously described.

An additional distinction is between conventional heterodyne receivers – requiring a separate laser source to serve as the local oscillator – and homodyne receivers, in which part of the laser radiation from the transmitter source is also used as the local oscillator for the receiver. Furthermore, offset homodyne receivers have been constructed, in which the local oscillator beam portion is frequency shifted from the transmitter beam.

A.3.1 Airborne Laser Radar Applications

Possible airborne LADAR applications include the following:

- Aircraft guidance (obstacle avoidance and terrain following);
- Tactical imaging systems (surveillance and reconnaissance); and
- Wind velocity measurement (clear air turbulence and severe storm sensor).

Some of these potential applications are described in the following paragraphs.

A.3.2 Airborne Surveillance and Reconnaissance

Laser systems offer several advantages over the standard photographic and microwave radar methods for airborne surveillance and reconnaissance, such as:

- The high optical resolution and small aperture associated with photographic systems can be made available during both night and day;
- Passive beacons utilizing retro-reflection are extremely light and small, of the order of millimetres is size; and
- By gating the receiver, the range to scene can be determined and foreground backscatter eliminated.

Line-scan systems use a narrow laser beam to scan the target area. The return energy is detected and then recorded in synchronism on a film or television monitor. Gated-TV systems flood the target area with a short pulse of radiation and use an image tube which can be switched on just before the arrival of the return energy. This allows a range determination and also helps to suppress false returns from haze or obstructions in the foreground. These systems can be used for night-time operation, relatively covert observations, and using a retro-reflector, for target identification, search and rescue, and landing aids.

In this section the use of lasers and their advantages in airborne surveillance and reconnaissance applications will be discussed.

A.3.2.1 Advantages of Laser Illumination

The short wavelength of laser radiation offers high resolution with extremely small size transmitting or receiving apertures. The diffraction-limited property of a laser allows concentration of the radiation in an area of diameter as small as one centimetre with a 10 cm aperture. Although this allows illumination of a very small target area, in practice one would normally use larger illumination areas. For co-operative targets, the optical wavelengths offer extremely efficient and lightweight passive beacons or retro-reflectors. Optical retro-reflectors focus the return signal into a very narrow beam and increase the target reflection. For example a triangular corner retro-reflector has a backscatter cross-section given by:

$$\sigma = \frac{4\pi a^4}{3\lambda^2} \tag{A.2}$$

where a is the edge length. Thus a retro-reflector with a one centimetre edge length has an effective backscatter cross-section of approximately 400 m^2 at a wavelength of 10.6 μm. This is increased to approximately 4000 m^2 at a wavelength of 1.06 μm. This simple beacon capability is especially valuable for co-operative tracking, as a landing aid, for search and rescue operations, and in target identification.

A.3.2.2 Systems and Applications

There are two basic types of systems which utilize laser sources for obtaining images from an airborne platform. These systems implement line-scan and gated television modes. In the first method a narrow laser beam is scanned over the ground and the return radiation measured by a spectrally filtered optical detector on board the aircraft. In a gated TV system the whole scene is illuminated by a short pulse of laser radiation and the image recorded through a regular optical system except that the image tube is gated such that it only records the return optical image after a finite delay time, determined by the range to the target area.

The line-scan and gated-TV systems offer both complimentary and unique capabilities compared with normal photography or microwave radar. For example, compared to normal photography, the line-scan system can operate on a 24-hour basis since it supplies its own source of illumination. Side-looking

microwave radar also has a full-time capability and has a much larger area of coverage. However, the limiting resolution is far superior for laser systems, which is very important in certain applications. In the case of the gated-TV system, again the night-time capability has marked advantages over photography, and in addition, the gating facility allows penetration of haze when normal visibility is poor. All these attributes offer distinct advantages for many forms of reconnaissance, although the specific gains are dependent upon the mission.

Beyond the general advantages for obtaining photographic reconnaissance as well as tactical surveillance, the use of simple lightweight passive beacons offers several advantages in certain instances, such as: search and rescue operations, where a downed pilot is supplied with a tiny retro-reflector to aid in location; target identification, where suitable beacons may be used to identify friendly targets; and landing aids, where the retro-reflectors can act as markers for landing strips.

A.3.3 Obstacle Warning Systems

Lasers have also found applications in helping to solve the problems of very low level flight by military aircraft. Military aircraft adopt this low altitude mode of flight in order to enhance their war-zone penetration capability. However, flight at very low levels greatly increases the probability of striking the terrain or man-made obstacles such as wires, poles, towers or buildings.

Conventional radar has the capability to provide a terrain following mode; however, it is inadequate for development into a reliable obstacle warning system. Although microwave systems were the first to be investigated in an attempt to develop obstacle warning systems, these investigations revealed that such radars are not suitable for this application. The nature of the inadequacy is twofold:

- The resolution of microwave wavelengths results in a very low and insufficient energy density at the target (obstacle); and
- At microwave frequencies much of the energy that is incident on the obstacle is reflected according to Snell's Law and therefore, unless the beam is incident on the obstacle at very close to 90 degrees, the energy is reflected away from the receiver.

For a laser radar to be effective as a terrain following and obstacle avoidance system it must meet certain operational criteria of performance. These criteria in turn will dictate the system design.

A.3.3.1 Operational Requirements for an OWS

In order to achieve mission effectiveness in the present threat environment, Western military aircraft operations have focused on-terrain or nap-of-the-earth flying. This is the tactic of employing the aircraft in such a manner as to utilize the terrain profile to enhance survivability by degrading the enemy's ability to visually, optically or electronically detect or locate the aircraft. The radar is required to maintain the aircraft flight at a preset altitude above the terrain. Since the adoption of this philosophy, the incidence of obstacle strike accidents has grown.

For an Obstacle Warning System (OWS) to be effective it must meet certain requirements. The first and most important requirement is reliable detection of all obstacles at almost all angles of incidence of radiation with a very high probability of detection and very low false alarm rate. By all obstacles, it is meant terrain masses, buildings, poles, towers, power cables and indeed any structure which may pose a hazard to low, fast flying aircraft.

The need for a high probability of detection is obvious since no obstacle must go undetected. A low false alarm rate is required to prevent spurious warnings that would cause the pilot to increase his altitude without real need, thus making him a better target.

Another operational requirement is the minimum detection range. This will depend upon the aircraft speed, climb angle capability (i.e., very different for helicopter and for airplane platforms), and pilot reaction time. As an example, for an airplane flying straight and level at 300 m/sec and allowing a reasonable pilot reaction time and aircraft response time of between five to ten seconds, detection ranges of about two to three kilometres are adequate. For helicopter applications, this range is generally reduced by an order of magnitude or more.

The system should, ideally, perform all of its required functions in all weather, day and night. In practice however, laser radiation is not capable of all weather operation and the best trade-off of system characteristics must be looked at.

A.3.4 Airborne Wind Velocity Measurements

Extreme wind turbulence is known as wind-shear and the most extreme form of wind-shear is known as a microburst. These phenomena have been blamed for several aircraft accidents in the past few years. The danger is in the fact that, if an aircraft flies into wind-shear at low altitudes without warning, it lacks the height to allow the pilot to compensate for the way the change in wind speed affects the aircraft flight path. Figure A-6 [3] illustrates the way the wind direction and speed change to push an aircraft off course.

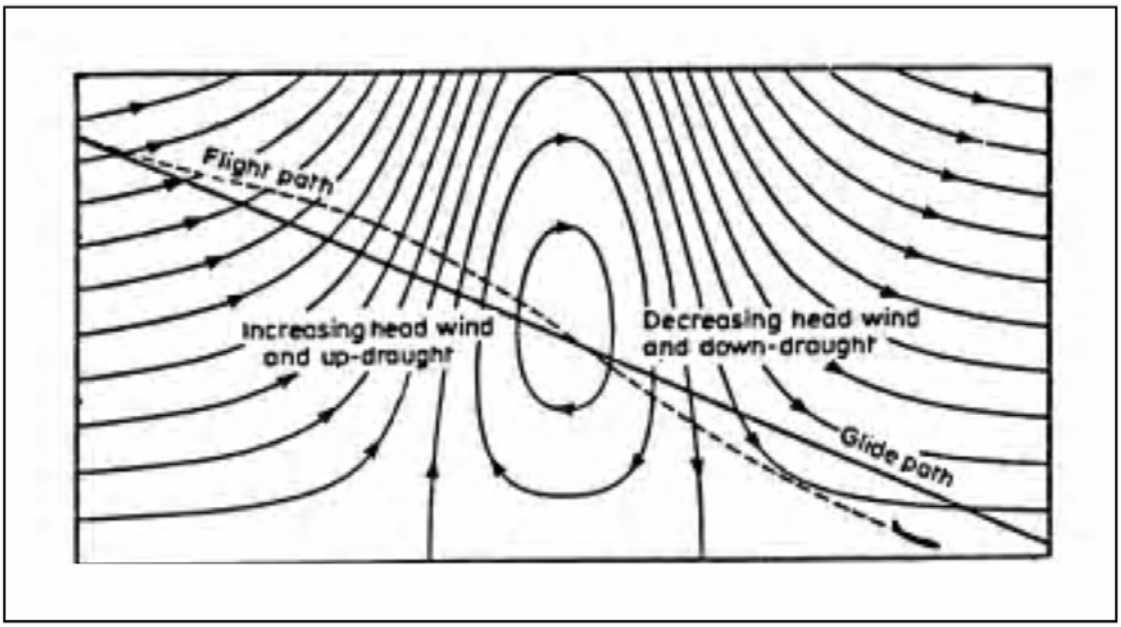

Figure A-6: The Wind-Shear Problem.

Federal Aviation Administration Advisory Circulars in the United States provide guidance for pilots on low-level wind-shear and describe it as: “A change in wind direction and/or speed in a very short distance in the atmosphere”. The circulars noted that, under certain conditions, the atmosphere is capable of producing some dramatic shears very close to the ground; for example wind direction changes of 180 degrees with speed changes of 50 knots or more within 200 ft of the ground have been observed.

A microburst lasts for a short period of time, about 15 minutes, and occurs over a distance of about three to four kilometres. Typically, the downdraft in a microburst could be travelling at between 2000 to 5000 ft/min. When flying through a microburst, the aircraft initially encounters a head wind which lifts it above its correct path. The pilot’s natural reaction is to bring the aircraft back onto its correct path by, for example, reducing

engine thrust. Within a few seconds the aircraft encounters a tail wind which will take the aircraft below its flight path. Now the aircraft needs more lift but the engine thrust has already been reduced and it will take the engine several seconds to respond to provide more power and thus produce the required lift. If the pilot is aware of the wind speed in front of the aircraft and has sufficient warning of impending wind-shear, it is possible for him to take the necessary corrective action.

Conventional Doppler radars have been experimented for many years endeavouring to study such atmospheric phenomena as convective cloud dynamics, boundary layer kinematics, and turbulence properties [4]. Most meteorological radars operate at wavelengths between 3 and 10 cm, therefore they can only detect particles of the order of a few hundred microns in diameter. They are of little use for studying atmospheric dynamics in clear-air regions and are used primarily to detect severe storms. A more appropriate remote sensor for providing clear-air wind measurements is coherent laser Doppler radar.

The methods of sensing wind velocity using a laser radar are based on the assumption that aerosols are fully entrained in the air mass motion caused by the wind. The laser provides an extremely bright source with a narrow spectral width which, when focused on an object, can give sufficient scattered radiation to permit measurement of very low velocities by means of heterodyne detection methods. This process is termed Laser Doppler Velocimetry (LDV).

Laser Doppler systems have been under research for some time and the main aim initially was to provide a system to make remote measurements of the wind so that very large changes (e.g., wind-shear) could be identified. Systems are now under development that can be fitted into the nose of an aircraft and can be used to measure the wind speed in front of the aircraft where it is unaffected by the airflow around the fuselage or wings. Furthermore, laser Doppler systems that can measure wind speed and wind changes accurately could prove useful in the design of an auto-throttle system that would help to reduce the workload of the pilot. This system could be used on both military and civilian aircraft to improve safety, particularly during takeoffs and landings.

A.3.5 Multi-Sensor Systems

Laser radar, while being a powerful sensor for airborne applications, still has its limitations. As an obstacle warning or an attack sensor its range is degraded by adverse weather. When used for terrain flying, its narrow beamwidth does not allow wide coverage, as does conventional radar; consequently, it can only be used as a backup system. However, as part of a multi-sensor system, laser radar could be very powerful. An example is the combination of a laser radar with a Forward Looking Infra-Red (FLIR) sensor in a single system. This solution offers night vision using the FLIR with the terrain flying and obstacle avoidance capabilities of the laser.

Figure A-7 is an example of a combined radar and electronic surveillance system which could perform five different functions:

- Passive listening, for gathering intelligence on other radar and transmissions over a wide frequency band;
- Laser obstacle avoidance and terrain following for covert operation;
- Primary radar for use in bad weather or as a cueing system for laser radar;
- Passive detection for accurate determination of the bearing of jammers or other radars; and
- Real-time passive night vision.

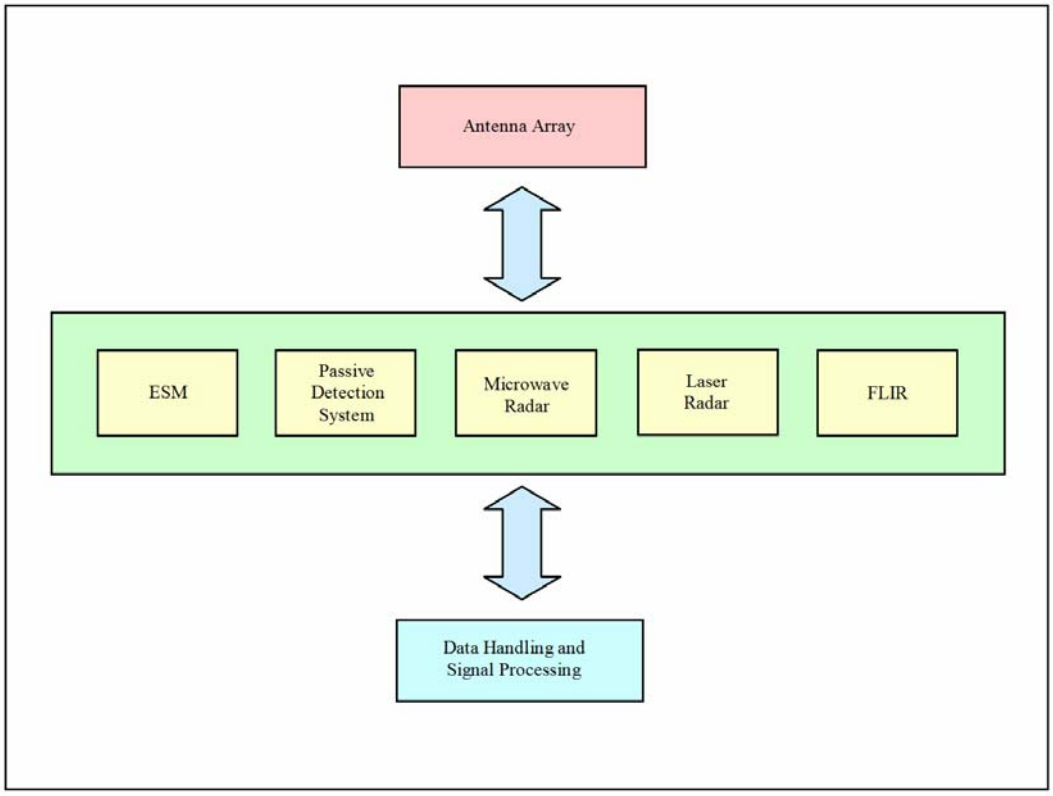

Figure A-7: Example of Multi-Sensor System.

The control of these functions would obviously involve complex computer processing which would respond to the various operational situations. Considerable research is currently underway addressing the problem of laser sensors integration in airborne integrated nav-attack, recognisance and electronic warfare systems.

A.4 DIRECTED ENERGY WEAPONS

The first airborne Directed Energy Weapon (DEW) was tested in the mid-1970's, under a program called the Airborne Laser Laboratory (ALL). The tested laser was a gas dynamic CO_2 system (400 kW version) developed by AVCO Everett and, later, by United Technologies in the US. The ALL system was installed on a KC-135 aircraft, along with an elaborate beam director. The program was technically successful (despite schedule slippages and an early missed shot), and the ability of the system to shoot down missiles in flight was demonstrated [5].

In the late seventies, further programs were funded by the U.S. Navy, convinced that the threat of missiles launched against a flotilla of ships could be minimised by shipborne DEWs. These efforts resulted in the MIRACL laser, developed by TRW, and the Sea Lite Beam Director developed by Hughes. However, by the time MIRACL was operational, shipborne antimissiles and guns proved to be a more attractive choice due to their lower cost and more mature technology. If DEWs were too expensive and complex for the defence of tactical assets, the logic followed that they might be used to "take out" opponent's strategic military assets, such as satellites.

Although these early airborne and non-airborne applications did not reach the final operational stage, they served to develop several different laser technologies (primarily chemical and free electron lasers), which are now being used in current military developments and in a wide diversity of commercial applications.

An airborne laser DEW system is now being developed in the US. The system, named ABL ("**A**ir **B**orne **L**aser"), uses a high-energy laser mounted on a modified 747-400F aircraft to shoot down heater ballistic missiles in their boost phase. Particularly, a tracking laser beam illuminates the missile, and computers measure the distance and calculate its course and direction. After acquiring and locking onto the target, a second laser (with weapons-class strength) fires a 3- to 5-second burst from a turret located in the 747 nose. The missile is then destroyed over the launch area. A pictorial representation of the ABL operation concept is shown in Figure A-8.

Figure A-8: ABL Concept of Operation.

The airborne laser fires a Chemical Oxygen Iodine Laser, or COIL, which was invented at Phillips Lab in 1977. The laser fuel consists of the same chemicals found in hair bleach and Drano (hydrogen peroxide and potassium hydroxide) which are then combined with chlorine gas and water. The laser operates at an infrared wavelength of 1.315 microns, which is invisible to the eye. By recycling chemicals, building with plastics and using a unique cooling process, the COIL team was able to make the laser lighter and more efficient while, at the same time, increasing its power by 400 percent in five years. The flight-weighted ABL module is similar in performance and power levels to the multi-hundred kilowatt class COIL Baseline Demonstration Laser (BDL-2) module demonstrated by TRW in August 1996. As its name implies, though, it is lighter and more compact than the earlier version due to the integration of advanced aerospace materials into the design of critical hardware components. For the operational ABL system, several modules have been linked together in series to achieve ABL required megawatt-class power level.

Atmospheric turbulence, which weakens and scatters the laser's beam, is produced by fluctuations in air temperature (the same phenomenon that causes stars to twinkle). Adaptive optics relies on a deformable mirror, sometimes called a rubber mirror, to compensate for tilt and phase distortions in the atmosphere. The mirror has 341 actuators that change at a rate of about a 1,000 per second.

The Airborne Laser is a Major U.S. Defense Acquisition Program. Testing of the laser module has been completed. The Program Definition and Risk Reduction (PDRR) phase (detailed design, integration, and test) will culminate in a lethality demonstration in the year 2002. A follow-on Engineering Manufacturing and Development/Production (EMD) effort could then begin in the early 2003 time frame. A fleet of fully operational EMD systems is intended to satisfy Air Combat Command's boost-phase Theater Air Defense requirements. If all goes as planned, a fleet of seven ABLs should be flying operational missions by 2008.

Performance requirements for the Airborne Laser Weapons System are established by the operational scenarios and support requirements defined by the user, U.S. Air Combat Command, and by measured target vulnerability characteristics provided by the U.S. Air Force lethality and vulnerability community centred at the Phillips Laboratory. The ABL PDRR Program is supported by a robust technology insertion and risk reduction program to provide early confidence that scaling to EMD performance is feasible. The technology and concept design efforts provide key answers to the PDRR design effort in the areas of lethality, atmospheric characterization, beam control, aircraft systems integration, and environmental concerns. These efforts are the source of necessary data applied to exit criteria ensuring higher and higher levels of confidence are progressively reached at key milestones of the PDRR development.

A.5 AIRBORNE LASER DATA LINKS

Modern battlefield strategy is predicated on knowing where the enemy's (or potential enemy's) assets ore located and their operational capability. This vital information is constantly being gathered and updated by various ground, space, and airborne sensors. The requirement to send ever increasing amounts of tactical military information between sensor aircraft and information processing facilities has begun to press the limits of present airborne data links, even when data compression techniques are used. Therefore, utilization of optical data links is being considered as a possible solution.

The feasibility of laser airborne data links was demonstrated in the mid-80's by the U.S. Air Force Research Laboratory HAVE LACE (Laser Airborne Communications Experiment) Program. This program developed and tested two laser communications terminals that operated at 19.2 kilobits/sec. The terminals were tested using two KC-135 aircraft that nominally flew at 20,000 to 25,000 feet (ft) altitudes with separation distances out to 160 km. The most significant result of the HAVE LACE flights was the difficulty of initial signal acquisition between the two moving platforms, since it had to be performed manually. However, once signal acquisition was accomplished, tracking proved to be robust and communications performance was consistently measured at 10^{-6} Bit Error Rate (BER) or better.

Since the HAVE LACE program, laser terminal development and data rates have improved dramatically. Therefore, various research programs have been undertaken in order to fully exploit the potentials of this technology, mainly for spaceborne and airborne applications. Another U.S. Air force program is currently ongoing to develop a wideband laser data link operating at 810 and 852 nm. In September 1995, the program successfully ground demonstrated a 1.1 gigabit/second full duplex data link over a distance of 150 km (Hawaii Islands). Successively, the system used in the ground demonstration was redesigned and installed in two jet aircraft for flight demonstration at distances up to 500 km. The demonstration flights, performed in September 1998, were successful and proved the ability of the system to communicate in the upper atmosphere to 500 km with a BER of 10^{-6}. The tests also provided data on atmospheric attenuation and beam scintillation. Furthermore, data on the effects of aircraft airflow upon beam steering were also collected. These data, and the information obtained from similar developments, are now being used for other laser communication development efforts (e.g., an air-to-space capability).

A.6 REFERENCES

[1] Hulme, K.F., "CO^2 Laser Heterodyne Rangefinders". Infrared Physics Vol. 25 (N° 1-2). 1985.

[2] Kamerman, G.W., "Laser Radar". ERIM-SPIE IR&EO Systems Handbook – Vol. 6 (Chapter 1). Second Printing. 1996.

[3] Hardesty, R.M., Elmore, K. and Minisclou, S., "The Anglo-French Compact Laser Radar Demonstrator Programme". AGARD-CP-563. 1995.

[4] Grossman, J., "The Airborne Laser Laboratory (ALL) Completes Successful Tests". International Defense Review – Vol. 116. 1983.

[5] Gill, R.A. and Feldmann, R.J., "Development of a Wideband Airborne Laser Data Link". AGARD-CP-595. 1998.