Chapter 2 – T&E OF ES SYSTEMS

2.1 INTRODUCTION

This chapter describes the basic operating principles of RF receivers, Missile Warning Systems (MWS) and Laser Warning Systems (LWS). The fundamental T&E methodologies for each type of system will be covered, beginning at the component level and progressing through fully installed system testing.

2.2 RF EW RECEIVERS

Nearly all modern RF EW systems employ some type of receiver system. Some receivers are designed for self-protection or real-time targeting; these receivers have stringent timeliness requirements and some degree of accuracy can be sacrificed to provide faster response times. Other types of receivers, such as those designed to support electronic reconnaissance and surveillance, have less stringent timeliness requirements but require greater accuracy to support their missions.

While different EW receivers serve a variety of functions, they share some common attributes. Figure 2-1 shows the basic functional architecture of most EW receiver systems:

- An aperture (usually a set of antennas to capture the RF signals of interest);
- A receiver to convert the RF signal to a video signal;
- A digitiser to convert the video signal to digital information; and
- A processor to perform the mission-specific tasks.

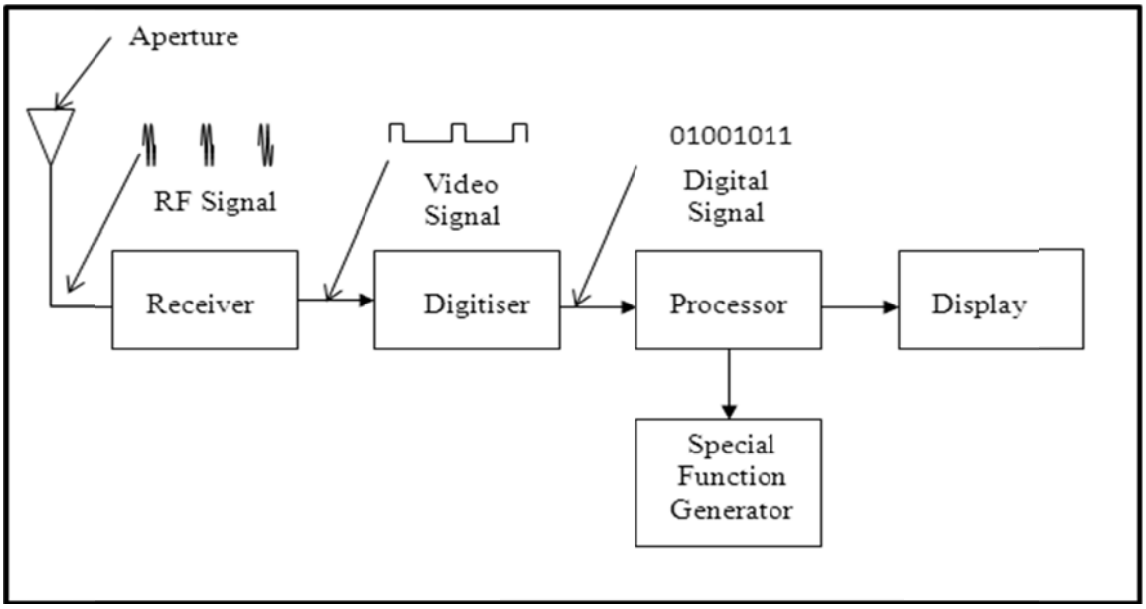

Figure 2-1: Basic EW Receiver Block Diagram.

The processor output drives aircrew interfaces such as displays and warning tones. The output is also provided to support special functions such as jammers, expendable countermeasures systems, etc. [1]

The Radar Warning Receiver (RWR) is the most widely deployed type of EW receiver system. An effective RWR performs two basic functions: to promptly warn the aircrew with sufficiently accurate information to

react to a threat engagement, and to provide threat radar parametric data to other countermeasures systems, such as chaff dispensers, to optimise their performance. It is of primary importance that an RWR provide prompt indication of threat activity to the aircrew.

An electronic reconnaissance and surveillance receiver differs from warning and targeting receivers in that its primary function is data collection in support of intelligence activities, with less emphasis on real-time applications. Electronic reconnaissance and surveillance receivers also usually make high-fidelity recordings of the intercepted signals for post-mission analysis. Since their primary application is intelligence related, they typically have more stringent requirements for accurate parametric measurements. Highly accurate Angle-Of-Arrival (AOA) information is needed in cases where emitter location is necessary.

Figure 2-2 shows the main types of EW receivers: RWR, Electronic Support Measures (ESM) and ELINT. It indicates their purpose and components, and the primary differences between them. In recent times, with the significant strides made in computing power and analogue-to-digital converters, the boundary between these three types has become increasingly blurred, especially so between RWR and ESM. For the remainder of this chapter, the term 'RWR' – from an EW T&E viewpoint – is thus considered to include 'ESM'.

	RWR*	ESM*	ELINT
PURPOSE **RECEIVER COMPONENT**	**WARN AIRCREW** OF RF-GUIDED THREATS & CUE COUNTERMEASURES	**DETECT/IDENTIFY & PRECISELY LOCATE** RF-GUIDED THREATS AT LONG RANGE. ECM CUEING.	**INTERCEPTION & ANALYSIS** OF HOSTILE NON-COMMUNICATIONS EMITTERS. DETERMINE ENEMY EOB. NO ECM CUEING.
ANTENNAS (FREQUENCY SUB-BANDED)	4 SPIRALS/FREQUENCY BAND FOR AZIMUTH. 4 MORE FOR ELEVATION	INCREASED No./TYPES OF ANTENNAS, INCLUDING PHASED ARRAYS, SPINNERS	USUALLY MULTIPLE, FREQUENCY-BANDED OMNI AND DF ANTENNAS
RECEIVERS, ANALYSIS & PROCESSING	WIDEBAND & SUB-BANDED, CHANNELISED RECEIVERS. ANALYSIS SHARED WITH STAND-ALONE PROCESSOR	AS RWR + OTHER TYPES, e.g. IFM. BETTER DF TECHNIQUES. INTEGRATED PROCESSING	MULTIPLE FREQUENCY SUB-BANDED SEARCH/ACQUISITION & SET-ON/ANALYSIS RECEIVERS. INTEGRATED PROCESSING NOW COMMON
RECORDING	RARE	BECOMING COMMON	DATA ALWAYS RECORDED
DISPLAYS & CONTROLS	OFTEN STAND-ALONE	OFTEN PART OF INTEGRATED AIRCRAFT D&C	PER-RECEIVER D&C COMMON. LATEST HAVE INTEGRATED D&C

*ECM RECEIVERS HAVE RWR/ESM CAPABILITY

Figure 2-2: EW Receiver System Types.

Two other important elements of EW receiver systems are the operational flight programme (OFP) and the Mission Data Files (MDFs). The OFP is software and it functions like a computer's operating system, controlling the executive functions of the system. The MDF is analogous to a computer application; it defines how the receiver searches for and acquires signals. The MDF also contains the parametric threat definitions derived from intelligence sources, e.g., a given threat's target-tracking (TT) radar operates in a given frequency range, on a series of potential pulse repetition intervals (PRI) (or determines whether it is a Continuous Wave [CW] signal), and a scan type and/or rate (for scanning radars).

The importance of mission data in modern receiver systems cannot be overstated. In scanning receivers, such as superheterodynes, the receiver will only survey the RF environment in the manner that it is programmed. Mission data changes can fundamentally change the way that the system operates. To the tester this means that each MDF can exhibit significantly different performance and be considered as a new test item.

The management of hardware, software, and mission data also has organisational implications, see Figure 2-3. The developing and sustaining organisations are responsible for the hardware and software. The mission data

is the responsibility of the military end user. In the case of a common RWR employed on both a fighter and a transport aircraft, for example, the hardware and software will be nearly identical and commonly managed, but the aircrafts' different missions will require the military end users to tailor the mission data to suit their individual requirements.

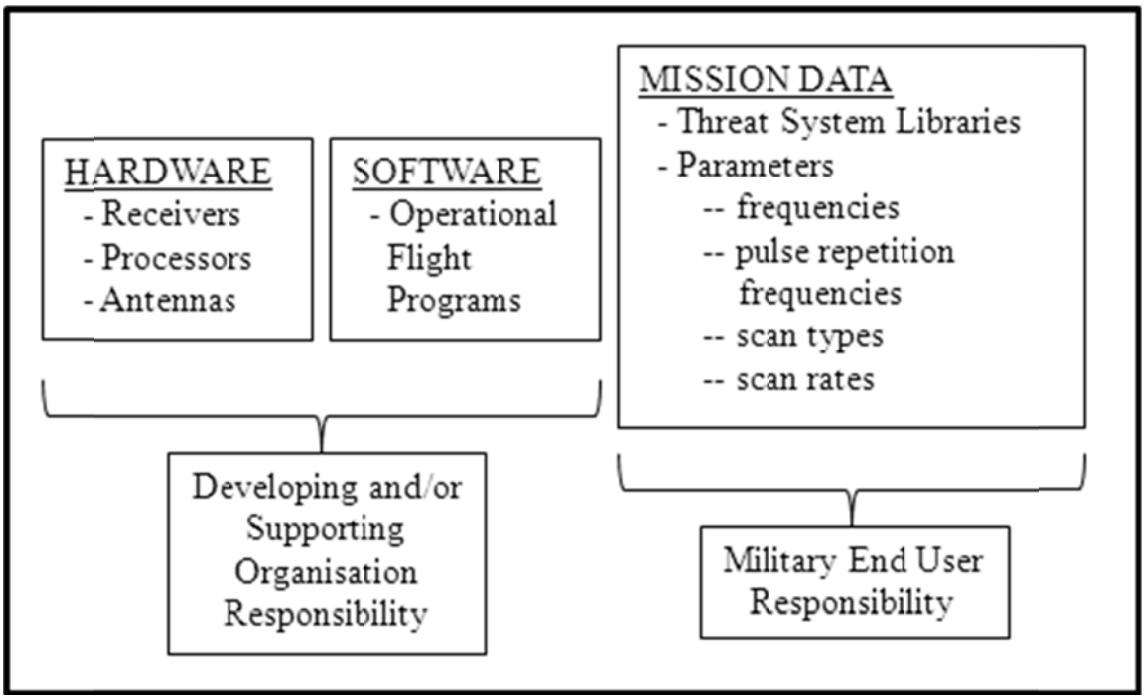

Figure 2-3: EW Receiver Elements and Organisational Responsibilities.

2.2.1 RWR System Components and Operation

The following section describes the typical components and operation of an RWR. Other EW receiver systems have similar types of components and operate in a similar manner. Figure 2-4 shows the basic layout of an integrated RWR, i.e., one that interfaces with other aircraft systems.

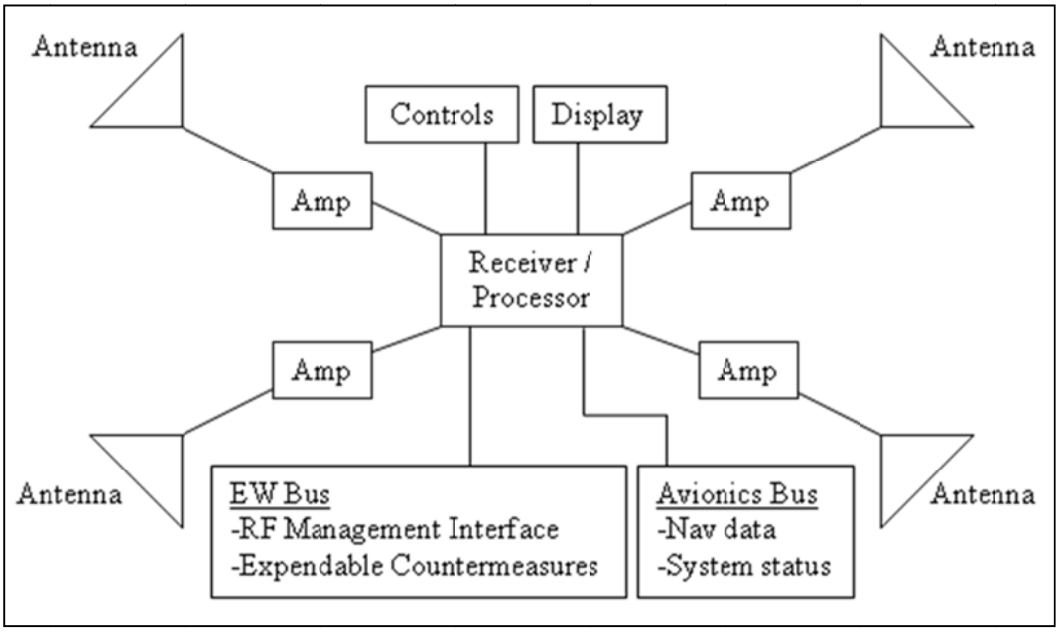

Figure 2-4: Typical Radar Warning Receiver Components.

2.2.1.1 Antennas and Transmission Lines

RWRs usually employ an array of antennas. These antennas are electromagnetic apertures tuned to the portion of the RF spectrum of interest. RWR antennas are broadband and typically cover the 2.0 – 18.0 GHz frequency range. Four orthogonally mounted antennas, each with an azimuth beam-width of approximately 90 degrees, are commonly used to cover 360 degrees in azimuth. On tactical aircraft the locations are usually at 45, 135, 225, and 315 degrees with respect to the nose of the aircraft. Elevation coverage varies, in some cases up to 360 degrees, but is typically around 30 degrees. Figure 2-5 shows a typical RWR/ESM antenna.

Figure 2-5: Typical RWR/ESM Antenna – (With permission, TECOM Industries Inc.).

The antennas generally connect to the receiver/processor in one of two ways:

- Via coaxial cable, often with an amplifier in the line to boost the analogue signal strength supplied to the receiver; and
- By employing a digital receiver located close to the antenna, which converts the analogue signal to a digital format and transmits it to the processor, thereby minimising signal power loss.

2.2.1.2 Receiver

Receivers are designed to detect specific radar signals at specified ranges and the installed receiver must have sufficient sensitivity to accomplish this task. The required sensitivity is calculated using the one-way radar range equation to determine the power density at the specified range. The installed receiver must be able to detect the signal at the calculated power density. Figure 2-6 shows a typical RF receiver transmission line and the installed sensitivity calculation.

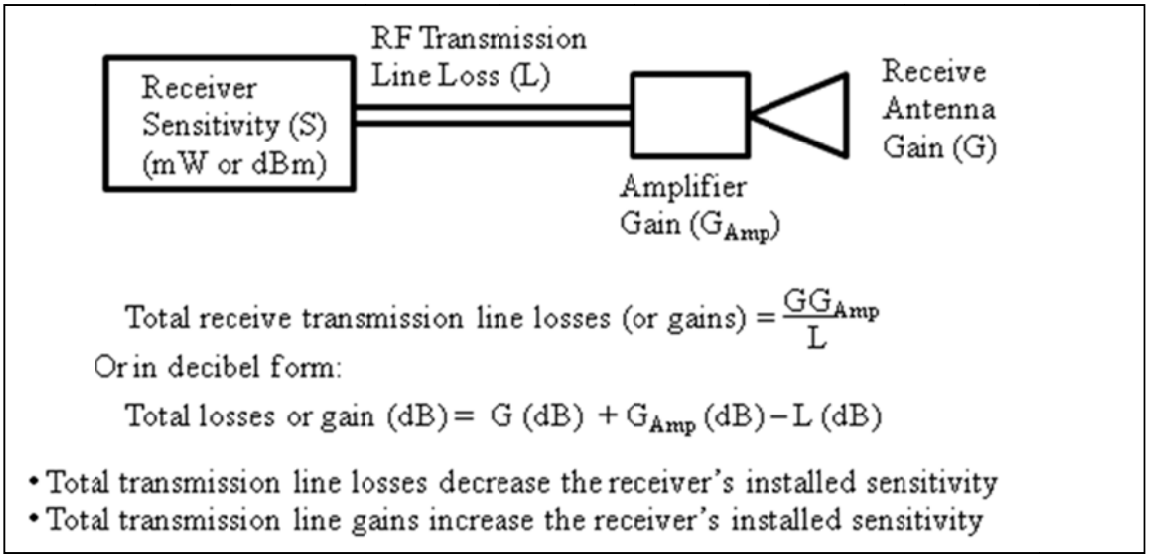

Figure 2-6: Receiver Transmission Line Components and Installed Sensitivity.

The receiver performs several functions related to signal parameter determination. The receiver creates a Pulse Descriptor Word (PDW) for each incoming pulse based on its measurements. A typical PDW is composed of information about the pulse: time of arrival based on an internal clock, AOA, signal amplitude, pulse width (or a determination that the signal is CW), and frequency.

2.2.1.3 Data Processor

The data processor takes the incoming PDWs and attempts to aggregate them into discrete pulse trains using discriminators such as AOA and frequency. Once a pulse train has been identified, additional parameters such as the PRI and radar scan type and/or rate can be measured. The PRI is merely the time between successive pulses, while the scan rate and type can be determined by analysing the time variation of pulse amplitudes. Scan rate and type information can be strong indicators of the lethality posed by the threat system.

When the individual pulse trains have been deinterleaved, they are compared to the parametric data contained in the MDF. If they match the MDF definitions, the threat beams and modes can be determined.

Further, if a threat radar system employs more than one beam, such as an acquisition radar and a TT radar, these component beams can be correlated.

Determining the AOA of a threat radar signal is an important RWR task. Amplitude comparison is a technique commonly used by RWRs to determine the AOA. The RWR typically employs four orthogonally mounted antennas arrayed azimuthally around the aircraft. The RWR samples the amplitude of an incoming signal through each antenna and can estimate the direction of the incoming signal by comparing the relative amplitudes of the four received signals.

2.2.1.4 Installation and Integration

Modern RWRs rarely operate in a standalone fashion. They commonly provide threat specific information via a data bus to other countermeasures systems such as chaff dispensers, jammers, and towed decoy systems allowing them to optimise their performance. Additionally, some functions such as emitter geolocation require the RWR to receive navigation and other information via data busses.

The information provided to the pilot indicates the type of radar that is directing energy toward the aircraft and possibly its mode of operation, its relative bearing, and an estimate of its range, together indicating its potential lethality. Many systems utilise a 3” (7.5 cm) diameter Cathode Ray Tube (CRT) to present this information to the aircrew. In newer systems the information may be presented on a page of a Multi-Function Display (MFD). The displays are oriented such that the top of the display represents the nose of the aircraft and the bottom of the display the aft of the aircraft. There may be several concentric rings on the display that are used to separate multiple threats by lethality. Many newer integrated systems display the RWR threat indications on MFDs.

The AN/ALR-56M is a widely deployed RWR. Figure 2-7 shows the system components and lists their functions. Figure 2-8 illustrates the case where a single RWR system type can be employed by more than one aircraft; in this case the F-16 and the C-130J.

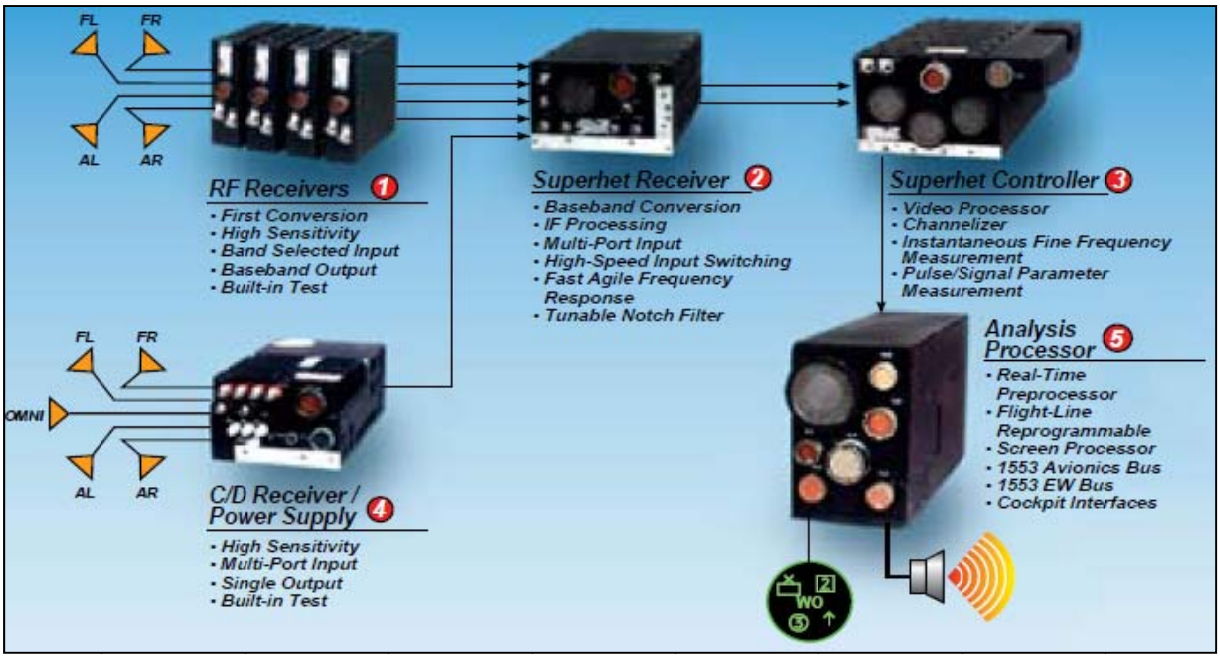

Figure 2-7: RWR Components and Functions – (Courtesy of BAE Systems).

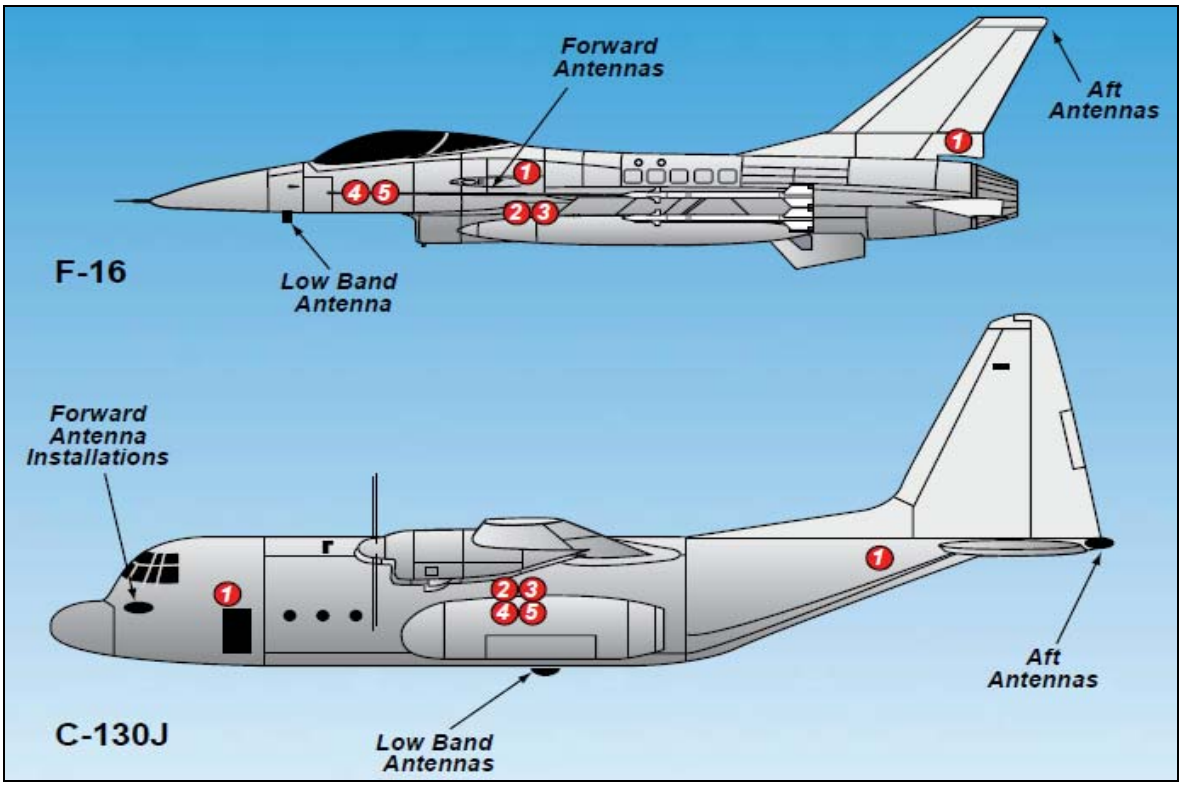

Figure 2-8: RWR Component Locations – (Courtesy of BAE Systems).

2.2.2 EW Receiver Testing (RWR Focus)

This section addresses the T&E of EW receiver systems. The following discussion focuses on RWRs but applies to other types of EW receivers.

There are many factors to consider when testing an RWR. The high-level requirements are easy to define. The system must be able to detect and identify specific radar beams, associate them with threat systems, and provide data to other countermeasures systems and the aircrew in an operationally representative environment within a specified amount of time period. These requirements are provided to the system manufacturer in a specification document.

RWR specifications and testing can be broken down into three main categories:

- DT&E of the uninstalled RWR and its constituent components;
- DT&E of the RWR as installed on the host aircraft; and
- OT&E to determine if the overall system is effective and suitable to perform its intended mission.

Each of these categories will be treated as discrete elements of testing in the following discussion. However, overlap does occur and can be very helpful in reducing programme risk. Shared participation by the following agencies' test teams allows decision makers to have access to comprehensive information throughout the programme:

- SUT manufacturer/supplier test team.
- Developmental test team, whether PSI, military or defence research agency.
- Operational (military) test team.

2.2.2.1 Uninstalled RWR Component and System-Level Testing

The RWR performance requirements can be functionally separated into testable requirements for each component. Some examples include receiver sensitivity, dynamic range, frequency selectivity, RF transmission line losses, pulse handling capacity for a receiver, and antenna gain over a field of view for a given frequency range and polarisation. These tests are normally performed by the RWR manufacturer using their laboratory test resources augmented by antenna pattern data generated from M&S sources or produced using measurement facilities. The results of these tests can also be extrapolated to estimate overall system performance.

The RWR component testing addresses design, development, and system performance. Design and development aspects are beyond the scope of this document. Individual component performance verification is important because if the individual components do not perform to their specified requirements, the overall system is unlikely to perform to its specified requirements. It is difficult to speak generically about receivers because almost every receiver is tailored to meet the specific needs of the system for which it was designed. There are, however, a few common measurements that are helpful to understand and these are described in the following sub-sections.

2.2.2.1.1 RWR Component Testing

Although comprehensive details of component-level testing are beyond the scope of this Handbook, it is helpful to be familiar with some of the measurements that characterise components. For additional information the interested reader is referred to [4]. Table 2-1 lists some commonly used receiver measurements, their definitions and their relevance to overall system performance. Other definitions are used and it is important to understand the specific meaning being used, particularly as applied to specification requirements.

Table 2-1: Common Laboratory Measurements on Receivers.

Measure	Definition	Relevance to System Performance
Minimum Discernable Signal (MDS)	The lowest power signal that can be discerned from the noise, i.e., the point where the signal power is equal to the noise power in the receiver. [2]	Receiver sensitivity directly relates to the maximum range at which a receiver system will be able to detect an emitter.
Frequency Selectivity	The ability to distinguish between signals closely separated in frequency.	The ability to process information from two emitters operating in close frequency proximity.
Dynamic Range	The input signal amplitude range that the receiver can process properly. The lower limit is the receiver sensitivity (MDS is commonly used). There is no universally accepted definition for the lower or the upper limit of the input signal level. [3]	The ability of a receiver to detect and process two simultaneous signals of different amplitudes and frequencies.
Signal Density Handling	The specified environment within which the receiver must be able to meet its other requirements for detecting and processing emitters. The number of pulses per second along with the number of CW signals is specified as well as the number and types of radars and their location (frequently specified by quadrant).	Relates to the ability of the receiver to operate in its intended environment without being unacceptably degraded.

2.2.2.1.2 Antenna Measurements

Antenna performance is a major contributor to overall receiver system performance and it is specified in two ways. The first is relative to the uninstalled configuration, which normally identifies the performance requirements for the antenna manufacturer. The second is relative to the configuration as installed on the aircraft. Generally the installed antenna pattern will be significantly different than the uninstalled pattern due to the electrical effects of the airframe. Installed antenna patterns have a significant effect on the overall system sensitivity and the AOA measurement accuracy.

Antennas are differentiated by physical size and electrical performance, in terms of gain versus frequency and gain versus AOA of the signal. Ideally, RWR antennas would be small in physical size, and have a positive constant gain over all frequencies and angles. It is possible for RWRs to cover the 2-to-18 GHz band with 3 dB (half-power) beam widths of approximately 90 degrees.

Antenna location on the aircraft can greatly influence the operation of the entire RWR. Computer modelling is used to design antennas and optimise antenna placement. Figure 2-9 shows several uninstalled RWR antennas and the left-forward quadrant antenna installed on an F-16 aircraft.

Figure 2-9: a) Uninstalled RWR Antennas – (Courtesy L3 – Randtron Antenna Systems); b) Installed F-16 RWR Antenna – (U.S. DoD Photo).

Aircraft stores, such as missiles, bombs, and fuel tanks can significantly affect the RWR antenna patterns – an effect known as obscuration. Obscuration limits the useful locations of EW antennas and is the reason why on some aircraft the RWR/ESM antennas are mounted in wing tip pods, e.g., Eurofighter Typhoon. Computing modelling of obscuration and other installed performance effects early in the design phase usually leads to optimum placement of antennas and minimum cross-coupling between antennas and their attached receivers. Such computational EM can likewise be of assistance during the T&E phase to isolate, investigate and aid resolution of any installed EW system performance issues that may arise.

LO aircraft pose a special problem for receiver and system designers. The installed antennas must have sufficient gain over the system field of view to accomplish the mission while not compromising the aircraft signature.

Due to their small size and the frequency ranges of interest, uninstalled antenna pattern measurements can usually be made in a small anechoic chamber. Figure 2-10 shows representative uninstalled azimuth antenna patterns and their variation over the 2 – 18 GHz frequency range. Installed antenna pattern measurements are commonly performed using outdoor far-field measurement facilities. Measurements are typically performed on full-scale mock-ups of either full of partial sections of the aircraft.

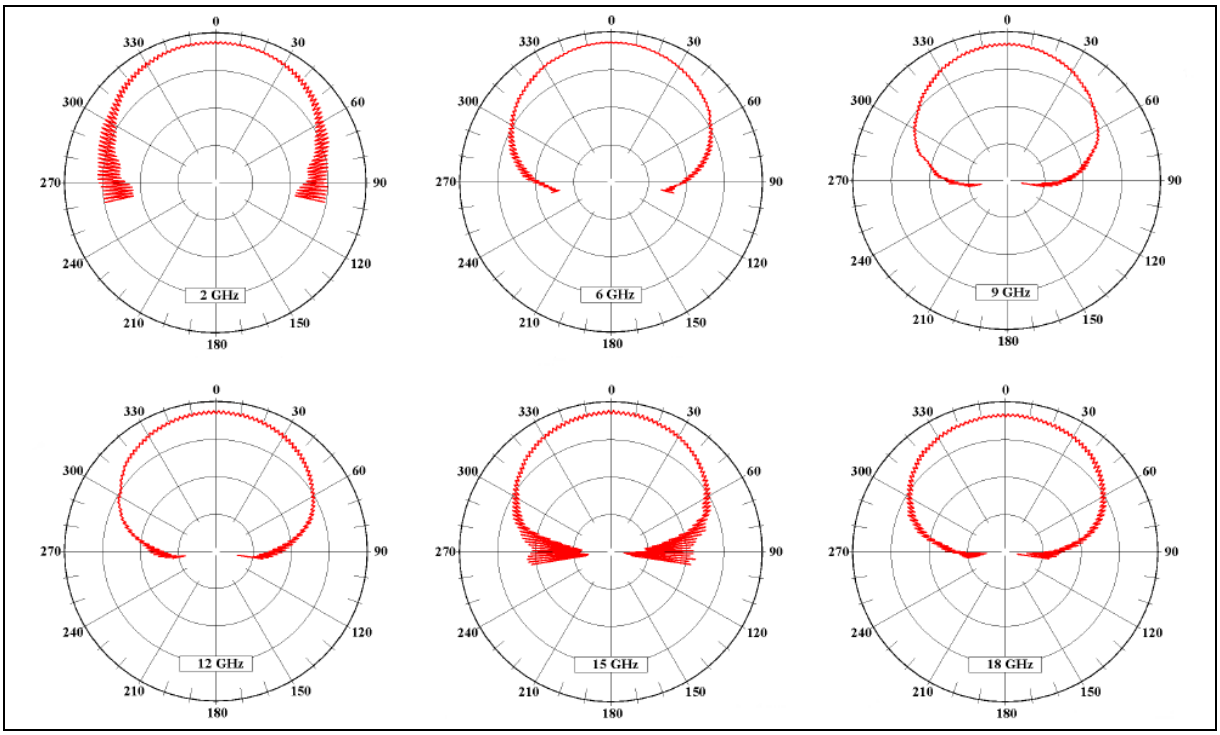

Figure 2-10: Representative Azimuth Uninstalled Antenna Gain Pattern Measurements – (Courtesy L3 – Randtron Antenna Systems).

Up front investments in antenna pattern measurements can provide significant risk mitigation. Redesigning antenna installations after unacceptable deficiencies have been identified in flight test can have serious cost and schedule consequences for acquisition programmes.

2.2.2.1.3 RWR System Level Testing

The primary purpose of RWR system-level testing is to support the manufacturer's system development and evaluation of system performance before progressing to installed system testing. System-level testing can be conducted at either the manufacturer's SIL, the PSI's Sub-System Laboratory, or at dedicated government SILs. The level of threat simulation fidelity and scenario complexity at manufacturer's laboratory facilities vary widely, from relatively low-fidelity signals and static scenarios to high-fidelity signals and dynamic scenarios.

Figure 2-11 shows a typical RWR system-level SIL configuration. At the heart of the test are the complete RWR hardware, software, and mission data. Normally, the input signals are directly injected into the receiver system and the antennas are not part of the test configuration. Additionally, most modern RWRs function as part of an integrated system on the host aircraft and interface via data buses with the other EW, avionics, and RF management systems. The RWR manufacturer typically does not have the full-up hardware and software for these systems and the data bus communications are simulated using computer-based emulators.

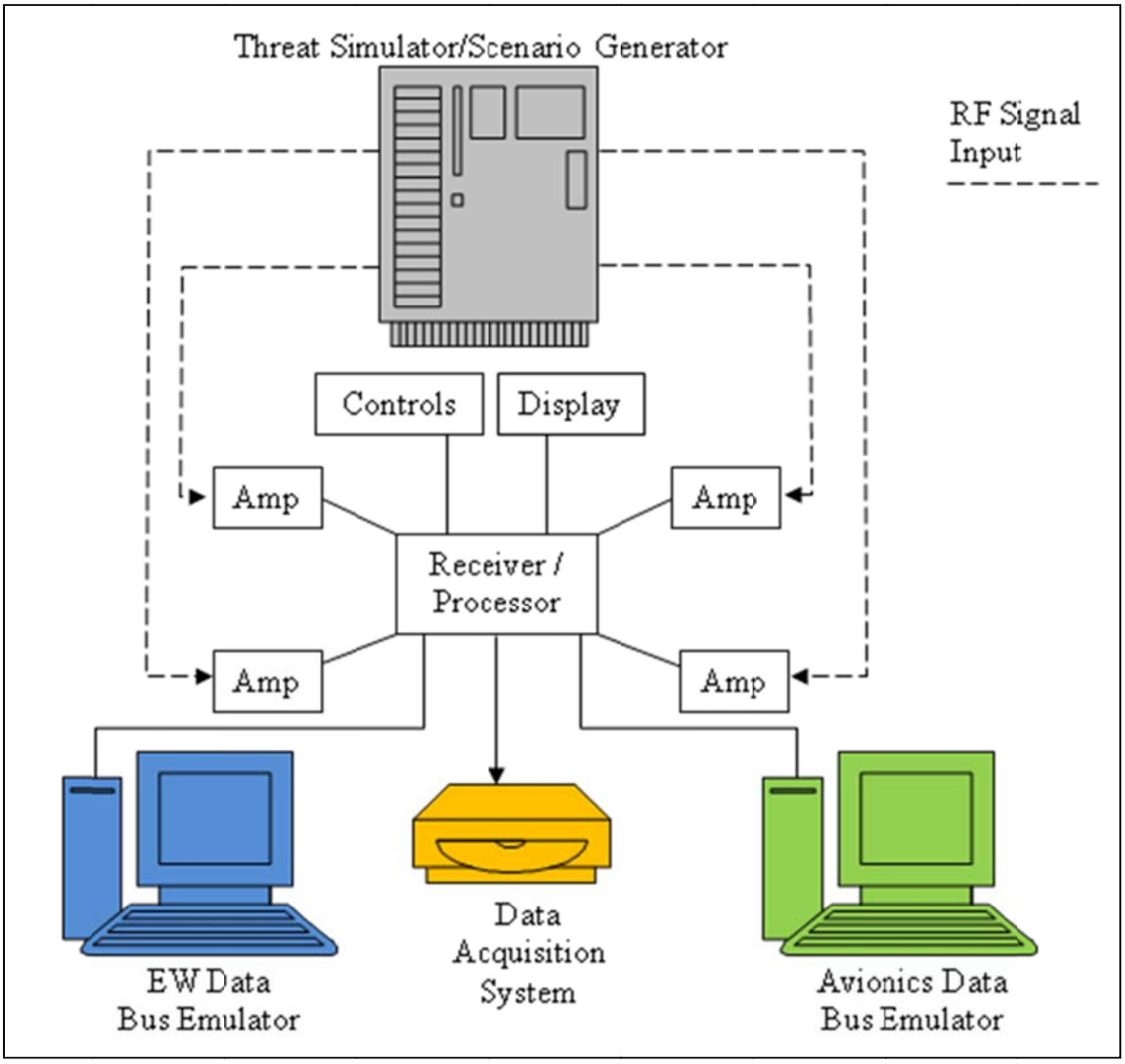

Figure 2-11: Typical RWR Manufacturer's SIL Configuration.

Complex dynamic scenarios are possible, but the RF threat simulator and scenario generator must vary the input signal amplitudes to simulate the changing threat-to-target range while accounting for the antenna effects. Antenna effects can be simulated using either modelled or measured antenna gain patterns.

System integration laboratories can be used to achieve two main objectives:

- Evaluate the performance of the uninstalled RWR system and its components; and
- Evaluate the communication between the RWR and other simulated onboard systems.

The SIL testing can evaluate the system performance against a variety of simulated threat radar systems. The specific threat systems are normally defined in the system specification and document the specific characteristics of each radar component of the threat system including: frequency ranges, PRI ranges, signal polarisation, scan types, scan rates, pulse widths, etc.

Important performance characteristics of the system can be evaluated during SIL testing allowing designers to optimise software and MDF performance. Identifying and correcting deficiencies during SIL testing allows changes to be incorporated relatively quickly, since flight certification isn't generally required.

Nearly all radars have more than one beam or mode that the RWR must detect and identify. Additionally, the RWR must perform these functions within a tactically meaningful time span. The MDF specifies the signal characteristics associated with each radar beam and mode. Initial system level testing should focus on the ability of the RWR to correctly identify each required beam and mode and the associated response times.

After the system performance has been optimised for each beam or mode and a baseline established, testing can progress to more representative scenarios. The simulated engagement scenarios model the behaviour of real individual radar directed weapons systems, e.g., a typical radar system will progress from an acquisition mode to a target tracking mode to a missile launch mode. The system should properly handle concurrent beams and mode transitions. The following paragraphs describe a typical radar directed threat engagement and the desired RWR behaviour.

A typical threat system employs a two-beam scanning acquisition radar operating on two discrete frequencies, a TT radar, and a Missile Guidance (MG) radar. Depending on how the threat is operating, one to four distinct beams may be illuminating the target aircraft. In a nominal engagement, the acquisition radar will be active and searching for targets. Once a target has been identified, the TT radar will begin transmitting and track the target. Finally, when a good track has been established the MG radar will activate to guide the missile. The MDF defines how these beams should be displayed.

The desired RWR response to this engagement is:

- The RWR should recognise that the two beams of the acquisition radar are part of the same system and should continue internally tracking both beams while correlating them and only display a single symbol representing the acquisition radar.
- When the TT radar becomes active, the RWR should internally correlate all three beams to the same system and promote the acquisition symbol to indicate that the threat status has escalated.
- Finally, when the MG beam activates the RWR should again internally track and correlate all four beams while promoting the symbol from a track indication to a missile launch indication. There should never be more than one symbol present at any time for a given threat system and it should always reflect the status of the most lethal condition associated with the identified radar beams.

The main limitations of system level SIL testing relate to the simulated antenna effects and the external data bus emulation. Most tactical RWRs determine the range to the threat radar by measuring the received power and calculating the range based on that power measurement. The installed antenna gain patterns significantly affect this measurement and even the best simulations only provide an estimate of the actual installed system ranging performance. Similarly, most tactical RWRs use a technique called amplitude comparison to determine the relative bearing to threat. The system compares the signal amplitude received by each antenna (typically by quadrant) and using this information can determine the signal's AOA. The SIL testing is very useful for developing ranging and AOA techniques, but the resulting data should be used with caution.

Since most EW T&E facilities employ direct injection of RF signals into the SUT, the antenna effects must be modelled based on the antenna-pattern data available. The injected RF energy needs to be amplitude modulated to account for antenna-gain variations over the pattern. The quality of the performance estimate is directly related to the quality of the available antenna-pattern data. Antenna data sources include: assumed-perfect patterns (smooth over the regions of interest), software-modelled patterns, or data from far-field

antenna ranges. There are other AOA measurement techniques, such as phase interferometry and they present more complicated challenges to a laboratory environment. Analysts should be familiar with the limitations of AOA performance predictions based on laboratory and ground test results and use them with care.

System level integration testing is generally limited to computer-based data bus emulators which can be used to ensure that the system complies with the input and output message protocols specified in the Interface Control Documents (ICD). This level of testing rarely involves actual hardware for the data buses and other systems.

These facilities also provide an opportunity to stress the receiver system with dense signal environments to determine if the RWR can still meet its required performance specifications when the receiver and processor are heavily loaded. This test environment also allows testers to evaluate RWR performance where threat simulators or actual radar systems are not available on an OAR.

Ground testing using OAR assets can also be used to reduce risk. A receiver system can be rack-mounted and taken to an OAR where the system can get exposed to high fidelity simulators and actual radar systems. Actual radar systems have a number of peculiarities that are not necessarily captured in laboratory representations of the signals. [5] For example, a system that is considered to operate on fixed discrete frequencies may have a significant frequency shift that occurs on power up. If the RWR MDF doesn't account for this, the system might interpret the behaviour as multiple instances of the same threat system and generate multiple symbols on the display. This type of testing is a very cost-effective way to optimise the mission data prior to flight test.

2.2.2.2 Installed RWR Testing

Installed systems testing takes place with the RWR system integrated with other platform systems. There are three levels of installed system testing: the first occurs in a laboratory environment where the RWR is integrated with actual aircraft systems (this is not strictly speaking an installed system test since the SUT hardware and software are not installed on the host platform. However, it is a critical developmental activity); the second takes place during ground testing on an aircraft; and finally, flight testing is conducted using an OAR.

2.2.2.2.1 Integration Laboratory Testing

The first time an RWR sub-system will be integrated with actual aircraft hardware is normally in the aircraft contractor's or PSI's SIL facilities, also called Defensive Aids Sub-System (DASS) and Avionics Integration (AI) laboratories. These facilities, as illustrated in Figure 2-12, commonly employ mock-ups of the airframe including the cockpit and using actual hardware, cabling, and software wherever possible. In many cases, sub-systems such as the FCR are fully operational. Since previous RWR testing has been conducted with computer emulated data buses the increased level of fidelity provided by generating actual data bus traffic provides a good measure of risk reduction prior to actual on-aircraft test activity.

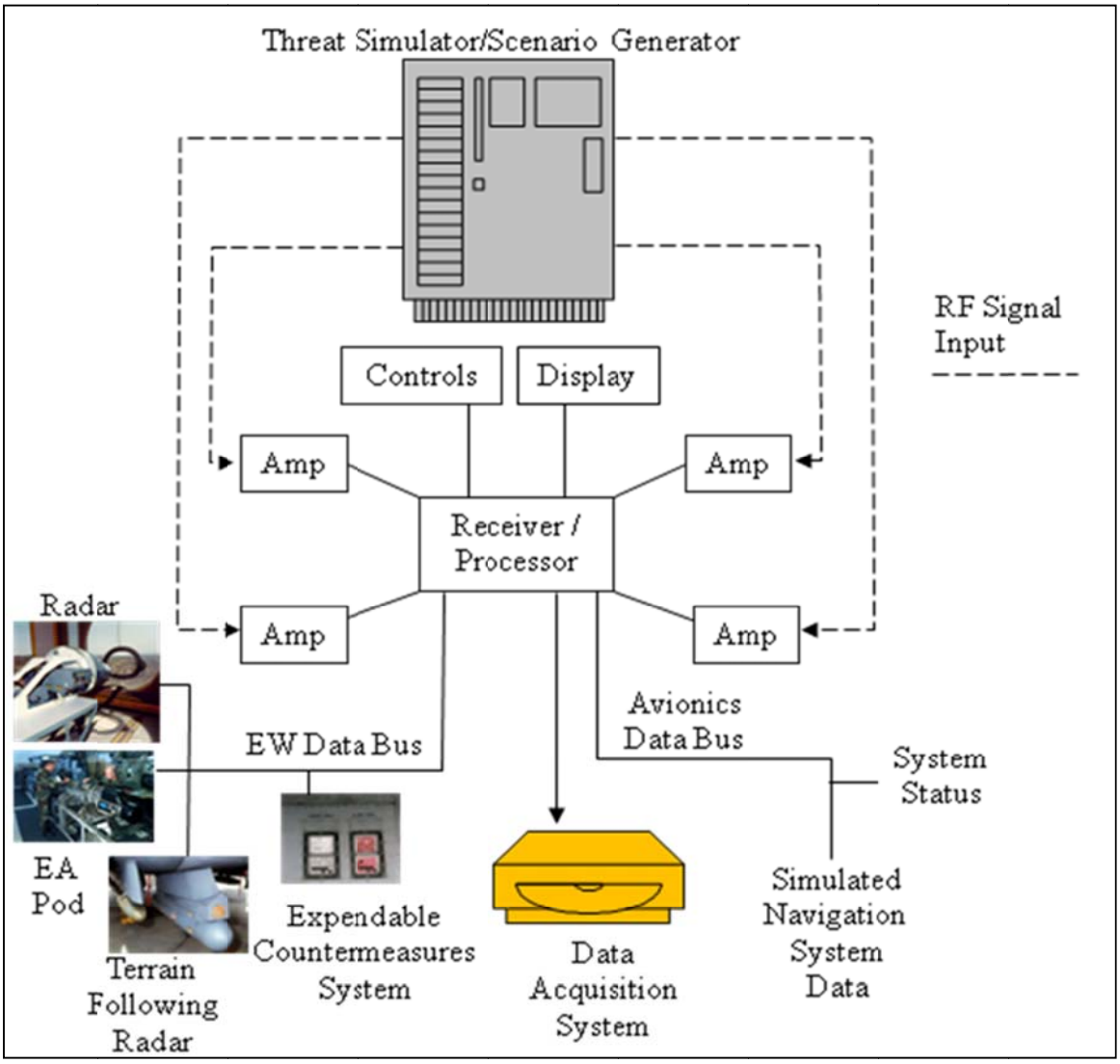

Figure 2-12: Typical Airframe Manufacturer's SIL Configuration.

The simulated RF threat signals are typically directly injected into the receiver, a technique known as 'post-antenna injection' or 'direct injection'. Testing in SIL and AI laboratories generally involves low-to-medium threat scenario densities since the emphasis is on system integration, although this can vary considerably by airframe contractor and PSI. DASS laboratory testing generally uses higher densities. Threat scenario densities used on high fidelity threat simulation equipment in these facilities can differ across Nations.

2.2.2.2.2 Installed System Ground Testing

Installed system ground testing can occur either in a specialised ISTF or at a convenient location on the flight line. The location of the testing is driven by the test requirements. On-aircraft ground testing allows testers the first opportunity to evaluate RWR system integration and performance on a fully equipped test article. Ideally, the test aircraft will have an RWR system installed in a production representative configuration along with all the RF transmitting systems and RF management equipment. The RF management system

coordinates activity among the onboard transmitters and receivers, e.g., the fire-control radar provides information about its RF transmission to the RWR so that the RWR won't process and track it as a threat.

EMC testing is conducted to determine if the onboard RF transmitters cause EMI with the operation of onboard receivers, such as RWRs and other EW receivers, or other onboard equipment. Testing is conducted by analysing characteristics of the aircraft systems and generating a 'source – victim matrix'. This matrix identifies RF transmitters and the modes of operation most likely to interfere with the receiver systems and their operating conditions. This is typically a large matrix and a time-consuming test. Each transmitter is operated under each specified condition while the victim systems are monitored for interference. Interference can manifest itself by generating false RWR threat file tracks and/or erroneous symbols on the RWR display.

EMC testing is best conducted using an ISTF, i.e., an anechoic chamber, although if one is not available the testing can be done on the flight line. The advantage of using an anechoic chamber is the high degree of isolation from extraneous ambient RF signals. Outdoor testing in a high-ambient RF noise environment has several potential pitfalls. One is that the ambient noise will desensitise onboard receivers; another is that RF reflections from stationary objects can cause interference (such as a FCR transmission reflecting off of a hangar and causing the RWR to display a symbol) that would not occur in an anechoic chamber or in flight. Figure 2-13 shows a CV-22 aircraft undergoing testing in an anechoic chamber.

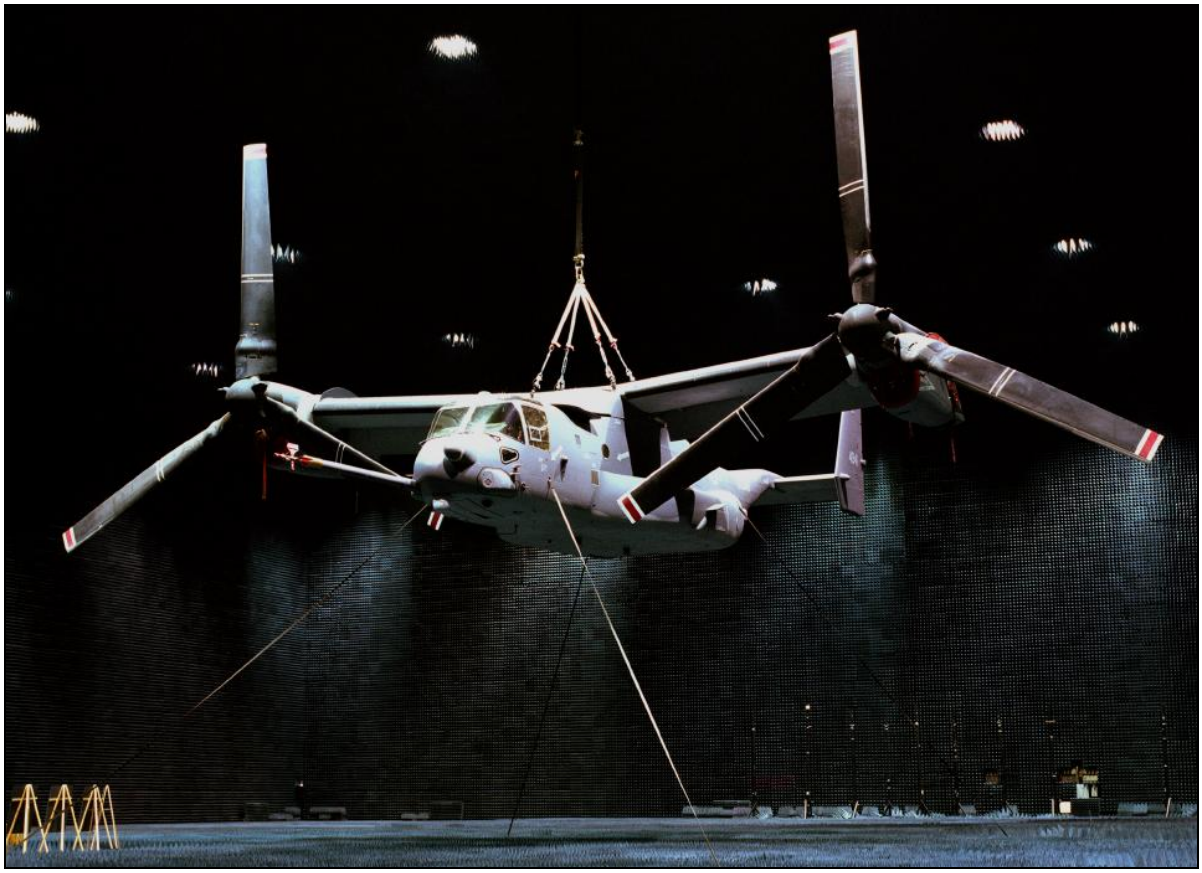

Figure 2-13: CV-22 in the Benefield Anechoic Facility, Edwards Air Force Base, California, United States – (USAF Photograph).

EMC ground testing is an excellent screening tool to reduce the number of conditions that need to be examined in flight. In most cases there will be a small number of conditions where interference is noted.

Unless there are safety of flight concerns these conditions should be repeated in flight to verify that the condition actually exists and not an artefact of the ground test configuration.

In addition to EMC testing, many anechoic chamber ISTFs have excellent threat simulation capabilities. This affords the test team the opportunity to verify the performance data from previous laboratory testing using free-space RF signals with the actual aircraft equipment and in the presence of other onboard systems operation (direct signal injection is also an option). It also represents an opportunity to fine tune mission data before proceeding to flight test.

2.2.2.2.3 Installed System Flight Testing

In one respect flight testing represents the pinnacle of realism for EW receiver testing. The SUT is operating in its intended environment with the aircraft in a flight configuration (landing gear up, engines operating, etc.), using aircraft generated power, in the presence of other operating onboard systems, and in the real-world electromagnetic environment (including civilian RF transmitters). OARs have a variety of high-fidelity simulated and actual threat radar systems providing the best available representations of those threat systems. Proper use of laboratory and ground test facilities minimises unexpected results in flight test.

The benefits and drawbacks of OARs are given in Chapter 6. The limitations of OAR testing include the limited numbers of simulators and actual radar systems, resulting in limited-signal-density environments. In addition to the cost of operating the test aircraft, the OAR range costs can be substantial. Range availability can also be an issue, particularly for lower priority programmes. These cost and schedule implications require early test management consideration. See Figure 2-14.

Figure 2-14: Flight Test Advantages and Limitations – (U.S. DoD Photo).

Another consideration involving actual radar systems is that they only represent a single instance of the combat population. If the combat population for a hypothetical radar system is assessed to operate in the 8.0 – 10.0 GHz frequency range and the single radar on the test range operates on a fixed frequency of

8.1 GHz, a large portion of the RF operating range of the radar cannot be examined at the OAR. Integrated test planning across the various test resources should ensure that those areas, particularly in terms of frequency and PRI, should be examined using ground test assets. In particular, the ground testing should cover a representative spread of threat instances to be encountered during DT&E and OT&E flight test.

Another limitation of OAR testing is that unlike the M&S, laboratory, or ISTF environments, where the RF background is totally controlled by the test planners, the OAR ambient RF environment can contain noise and nuisance signals that may affect the test. False alarms can be a significant problem and knowing the ambient signal environment can be useful in analysing unexpected behaviours of the SUT. Most OARs have excellent signal monitoring and recording capabilities to aid in this regard.

False alarm rates are normally specified for receiver systems. Usually the requirement specifies a maximum number per hour. This is a problematic measure. The false alarm rate for any receiver is integrally related to the environment in which it is operating. The limited number of flight test hours available generally makes a statistically meaningful flight test based assessment difficult (unless the performance is very poor).

The OAR provides the highest fidelity representation of the threat systems that a test programme can produce, although ground test facilities are increasingly able to generate high-fidelity threat representations. Frequently, testing will be conducted against each individual radar to establish a performance baseline for that system. Subsequent testing then focuses on the system performance in more dense multiple signal environments.

A major advantage of OAR EW receiver testing is that test aircraft are always in the far field relative to the simulated threat radar systems. This is particularly applicable when addressing MOPs that directly relate to installed antenna performance. AOA measurement error and ranging error are related MOPs.

The highest priority OAR threat simulators and radars used in support of a test programme should be those with the most relevance to the operational mission of the host aircraft. However, other less operationally relevant emitters should be considered when they allow the test team to examine how the SUT handles different portions of the frequency spectrum, polarisations, and waveforms. Airborne surrogate threat systems can also provide insight about system performance at elevation angles that otherwise could not be examined, e.g., high look-down elevation angles.

Performance estimates for MOPs such as response time, correct initial identification percentage, and correct beam correlation are generally available from ground and laboratory testing. These MOPs can be evaluated concurrently in flight using a series of profiles.

The flight test profiles describe how the aircraft will fly from a defined initial point to the end point specifying airspeeds, altitudes, and any manoeuvres. Corresponding mission and flight cards will describe how the simulated threat radar(s) will operate and how the SUT will be configured. A typical mission card will specify which radar systems will participate on the run, when they will be active and how they will operate their constituent radars (acquisition, TT, and MG) in terms of modes, frequencies, PRIs, etc. The aircrew will also have a flight card identifying the SUT configuration in terms of MDF and modes. The flight card should also inform the aircrew of the expected behaviour of the system in terms of which symbols should appear and where they should appear.

The flight profiles for an RWR test will typically begin at about twice the maximum engagement range of the radar and fly through the heart of the engagement envelope of the threat system. Throughout the run the radar will cycle through a series of scripted mode changes. Sometimes several profiles will be used to evaluate performance at different aspects and ranges. Data collected concurrently on these runs can be used to evaluate key MOPs such as response time, initial correct identification percentage, correct beam correlation percentage, and AOA error. Ranging error can also be evaluated concurrently.

Human factors considerations are also important. The symbology should be clear and should transition smoothly on the display in a manner that accurately represents the threat activity. Audible tones and cues should be clear and sufficiently loud to alert the crew.

2.2.2.3 Operational Test and Evaluation

OT&E focuses on the ability of the military end user to effectively employ the weapon system under realistic combat conditions. It also evaluates the operational suitability of the weapon system. Reliability, maintainability, and supportability are among the most important aspects of a fielded RF receiver system and these are primarily evaluated during OT&E.

One of the most important suitability considerations for a fielded receiver system is mission data reprogramming. The military end user must be able to receive and review intelligence data to determine if a mission data change is required, such as when a threat system is found to be operating on a previously unknown frequency. A very important aspect of an operational suitability evaluation is the ability of the military end user to make necessary mission data changes, rapidly distribute them to operational units in forward locations, and install them on the aircraft.

2.3 MISSILE WARNING SYSTEMS

All missile types pose a threat to military air platforms. In particular, passively-guided, IR-directed missile systems pose a major threat. The most common of these are Man Portable Air Defence Systems (MANPADS). They have accounted for the majority of aircraft combat losses over the last 30 years. Detecting missile launches, warning aircrew of this threat and cueing countermeasure employment is one of the most challenging tasks facing the ES community. Missile Warning Systems (MWS) are designed to detect these missile launches and, in the case of the MWS sub-categories Missile Approach Warners (MAW) and Missile Launch and Approach Warners (MLAW), their approach. The wide proliferation of lethal, relatively inexpensive, man-portable threat systems and the increased level of terrorist activity in recent years have led toward equipping ever more military aircraft with MWS.

2.3.1 MWS Technologies

There are three types of MWS technology:

- Active RF – Pulsed Doppler (RF-PD), e.g., ALQ-156;
- IR, e.g., DDM-Prime; and
- UV, e.g., AAR-54(V).

There is no single technology that is yet fully adequate for all aircraft roles, missions, scenarios and operational theatres. The main benefits and drawbacks of each technology is summarised in Table 2-2.

Table 2-2: Summary Comparison of MWS Technologies.

MWS Type	ADVANTAGES	DISADVANTAGES
RF-PD	• Measures distance and speed of approaching missile, enabling accurate Time To Impact (TTI), and thus aiding optimum countermeasure employment. • Tracks the missile all the way to impact. • Not as sensitive to weather conditions as IR and UV MWS.	• Limited range compared to IR and UV MWS due to practical levels of RF and prime power, cooling, volume and cost constraints. • 'Beaconing' effect can allow MWS RF transmissions to be detected and utilised by threat weapon targeting systems, especially those using modern 'digital' receivers. • Cannot measure DOA accurately, so cannot cue DIRCM systems or optimise flare/ chaff dispensing on basis of DOA. • Potentially vulnerable to hostile jamming and mutual interference from formation flyers, although radar ECCM and synchronisation techniques are effective. • Small, low RCS missiles could lead to late detection and countermeasure cueing. • Generally higher mass, volume and prime power than IR and UV MWS. • Integration more difficult than passive MWS due to need for RF interoperability with other on-board emitters and receivers.
IR	• Longer detection range than RF-PD and, at altitude (where there is little ground clutter) than UV MWS. • Good DOA for DIRCM cueing, presuming enough sensors. • Generally lower mass, volume, prime power than RF-PD MWS. • Passive system, so no EMCON issues. • Relatively easy installation and integration compared to RF-PD MWS. • Dual-band ('two-colour') IR MWS give improved performance.	• Relatively high FAR compared to RF-PD and UV MWS. Needs extensive 'false threat signal database' and complex processing to cater for large natural (solar) and man-made IR clutter. • Generally higher mass, volume and prime power than UV MWS. • IR sensors require cryogenic cooling, adding to mass, volume, prime power and cost when compared to UV MWS. • TTI is algorithmically calculated, rather than measured as in the RF-PD case, leading to sub-optimal cueing of time-critical countermeasures.
UV	• Greatest benefit at low operational altitudes for use against short range SAMs launched from modest ranges. • Longer detection range than RF-PD MWS. • Better FAR performance than IR MWS, especially in the Solar Blind UV region, where there is little clutter. • Good DOA for DIRCM cueing, presuming enough sensors. • Generally lowest mass, volume and prime power of the three technologies. • Passive system, so no EMCON issues. • Relatively easy installation and integration compared to RF-PD and IR MWS.	• Cannot detect a burnt-out, i.e., coasting, missile. • Modest detection range compared to IR MWS. • Cannot provide range but can derive TTI from rapid increase in amplitude of approaching missile's signal.

Around the time of Issue 1 of this Handbook, there were about the same number of RF-PD and passive (IR/UV) MWS either in service or under development. At that time, IR and UV systems suffered from much higher False Alarm Rates (FAR) than RF-PD systems. In recent times technology developments have led to the trend in MWS toward IR/UV technology, for a variety of reasons including FAR improvements, cooling and power requirements, EMCON and cost. RF-PD technology, however, being radar-based, continues to provide the most accurate missile speed, Time To Impact (TTI) and Range to Impact, which are necessary to optimise the timing of flare/chaff and other countermeasures appropriate to the engaging missile type. Set against this is the IR- and UV-based systems' superior detection range.

The technically optimum MWS would likely be a combined RF and IR/UV system, with the latter passively cueing the active RF RF-PD system in order to minimise EMCON hazards. Generally, such a solution is, in effect, the same as fitting two MWS to an aircraft. This poses significant power, volume, mass and installation constraints, especially on fighter-sized aircraft, and is also often unaffordable.

Given the increasing predominance of IR and UV MWS across NATO Nations, the remainder of Section 2.3 concentrates on passive MWS. Many EW T&E aspects covered therein are equally applicable to any of the three MWS technology types. Key differences concern the method of stimulating a RF-PD MWS when compared to passive MWS testing:

- RF target generators, similar to those used for FCR testing, are used during SIL/HITL/ISTF T&E.
- Flight testing of MWS performance can include:
  - Missiles fired captive on rocket sleds, with overflying aircraft carrying the RF-PD MWS.
  - Firing artillery shells in a carefully controlled trajectory to appropriately approach an overflying aircraft's trajectory so as to trigger missile warning declarations by the MWS.

2.3.2 MWS Components and Operation

Passive-threat warning systems are designed to detect the EM radiation from the rocket motor of the threat missile. Detection can occur due to the rocket motor ignition (launch detection) or by detection of the burning motor and body heating effects during fly-out (in-flight detection). Most modern systems employ sensors that use a combination of the two types of detection. Figure 2-15 shows a simplified MWS block diagram.

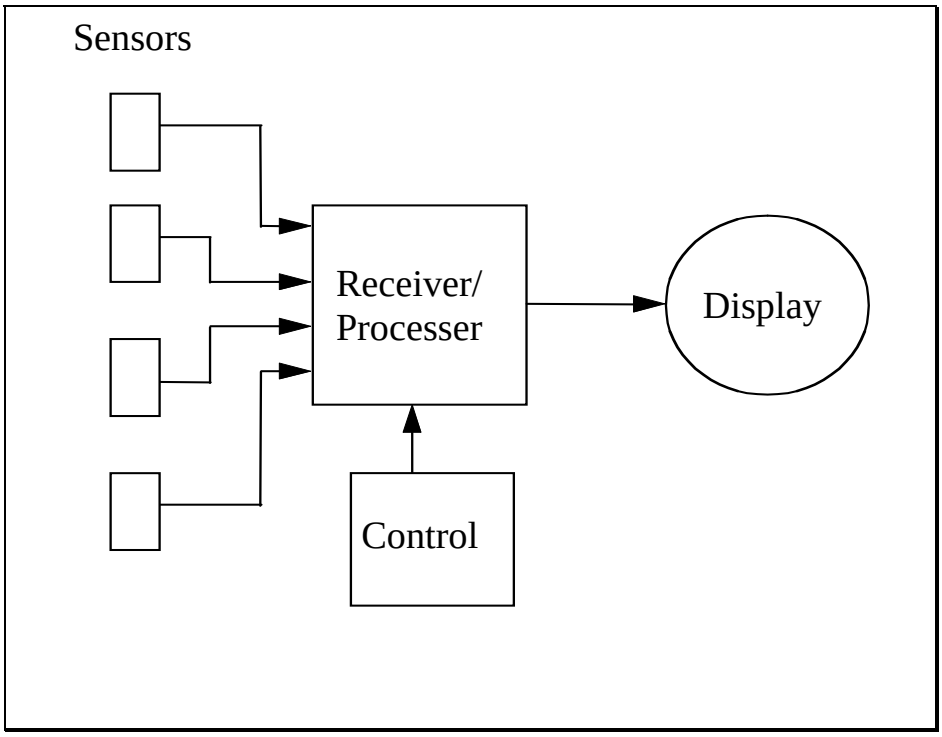

Figure 2-15: Simplified MWS Block Diagram.

MWS face the classic probability of detection versus probability of false alarm trade off. The MWS detectors must be sensitive enough to rapidly and reliably detect the missile's EM signatures and provide either the aircrew or, if in automatic mode, the Defensive Aids Suite's (DAS) countermeasures element sufficient time to react and cue an effective countermeasures response. The system must, at the same time, distinguish an actual missile launch signature from the extremely cluttered electromagnetic background. A false alarm occurs when background radiation produces an alarm in the MWS without the presence of a missile launch.

Modern MWS employ several techniques to minimise false alarms. These techniques fall in into three basic categories and can be used in combination:

- **Spectral** – Analyses specific portions of the EM spectrum to ensure the detection is consistent with the spectral signature of an actual rocket motor.
- **Temporal** – Examines the signal amplitude of a detection over time. As a missile closes in on a target, the range between the missile and the target will decrease while the signal amplitude received by the detector should increase exponentially.
- **Kinematic** – Compares the expected spatial behaviour of a missile on an intercept path with the spatial behaviour of a detection. A missile on a collision course with a target will have very small angular movement in the inertial reference frame (as opposed to the aircraft body axis reference frame).

2.3.2.1 Sensor

Passive MWS fall into two broad sensor categories: scanning and staring. IR passive warning systems were first developed over 30 years ago. Present day systems can use either scanning or staring sensors. These systems normally operate in the mid-IR (4 to 5 micrometers wavelength) or the UV bands. Scanning systems provide high-resolution direction-of-arrival information that can optimise countermeasures employment.

However, they generally give up some processing capability because the relatively long scan period can prevent the MWS from detecting the signature characteristics needed to identify the threat. Staring systems continuously cover large fields of view (up to 90 degrees) continuously. This can reduce sensitivity because the system is monitoring a larger area.

The UV portion of the electromagnetic spectrum features lower background noise than the IR region, with good signatures from missile rocket motors. These sensors are typically low-cost, simple photo-multiplier devices that are very rugged. They are typically staring, wide field-of-view (90 degrees or more) sensors. Figure 2-16 shows the uninstalled MWS components and a typical sensor installation.

Figure 2-16: Top: AN/AAR-54 Electronic Unit and Sensors – (Courtesy of Northrop Grumman Corp.); Bottom: Aft Missile Warning Sensor Installation on a C-130 – (USAF Photo).

2.3.2.2 Processor

Threat detection algorithms are usually based upon a number of criteria. Signal-to-noise ratio is a fundamental parameter. The MWS looks for a signal that exceeds the background signal level from the environment, for signal stability and possibly a particular signal amplitude growth which is characteristic of an approaching threat. It may also look for other time-dependent characteristics such as an ignition pulse followed by a short time delay before main motor ignition, typical of shoulder-launched SAMs.

MWS algorithms must differentiate between a complex battlefield EM environment and an approaching missile. It must also correctly distinguish a missile that is targeting the host aircraft from one that is approaching but not targeting it, i.e., one launched at another aircraft. These are very subtle distinctions.

2.3.2.3 Display

A standalone MWS will have a very simple display providing audio and visual information. The audio information consists of tones to alert the pilot to a new threat and the visual information will be some estimate of the Direction Of Arrival (DOA) of the approaching threat, usually only with quadrant resolution. An integrated MWS will most commonly use the MFD or Head Up Display (HUD) to provide the pilot with missile warning information. However, the displayed information may not be any more sophisticated than a few simple tones and quadrant DOA information.

2.3.3 MWS Testing

MWS testing parallels RF receiver testing in many respects, but differs in some important ones. The primary difference between RF receiver testing and MWS testing is that RF receivers are designed to detect and process active manmade signals associated with a weapon system, while missile warning systems are designed to detect the EM signature of a rocket motor and discriminate the signature from the background EM environment.

The MWS system-level performance testing requires exciting the SUT with a signal that will produce a threat indication. There are three common methods:

- Stimulators;
- Missile plume simulators; and
- Actual rocket motors.

Stimulators are the lowest fidelity means of exciting a system. They do not necessarily represent a missile launch signature, but have sufficiently representative EM signature characteristics to produce a response from the MWS. Different MWS employ different false alarm rejection methods and testers must be aware of them to ensure that the stimulator is not rejected by the MWS (at least in a way that will compromise the test objective). Static stimulators require the test aircraft to fly very constrained profiles to avoid triggering the kinematic false alarm rejection logic. Stimulators are very useful for system flight line checkouts and integration testing where high-fidelity simulation is not required.

Missile plume simulators provide a high-fidelity temporal and spectral representation of a missile launch. The Joint Mobile Infrared Countermeasures Test System (JMITS) shown in Figure 2-17 is an example of a system incorporating IR and UV missile plume simulations.

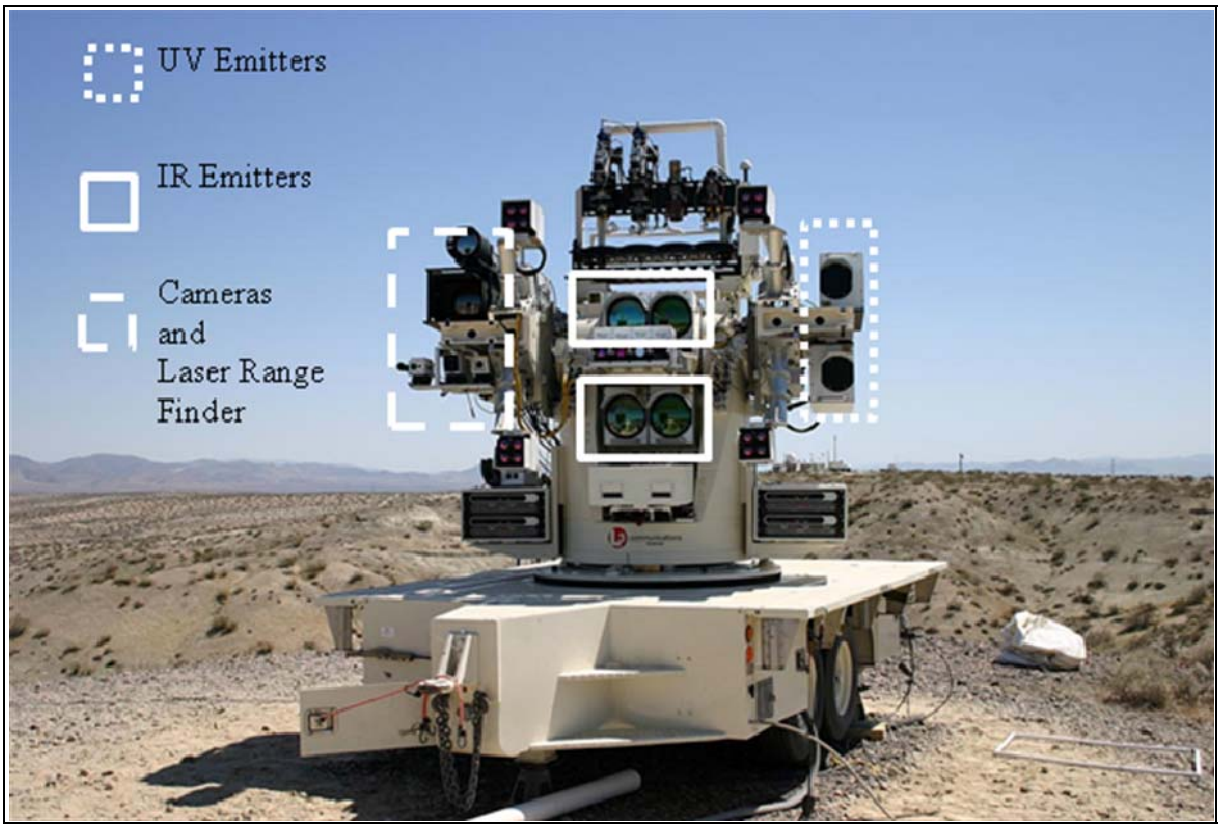

Figure 2-17: Joint Mobile Infrared Countermeasures Test System – (U.S. DoD Photograph).

There are several methods of simulating dynamic behaviour. One involves a string of pyrotechnic devices or lamps with the appropriate spectral characteristics. Each device is sequentially activated along the string. This sequential activation produces an apparent motion simulating a missile launch and fly out. If the test aircraft flies an appropriate flight path, the geometry will approach that of an intercept course. Dynamic missile plume simulators are under development. These systems will be towed by a support aircraft and provide high-fidelity temporal and spectral representations with the added capability of realistic kinematics.

Actual missile firings can either be performed using captive missiles on a sled track or live fires. The captive missile launches using a sled track is a similar approach to “string of lamps”. The test aircraft can fly low over the captive missile launch and simulate an intercept geometry. Live missile fire testing, where remotely piloted vehicles or other unmanned platforms are used to carry the MWS, tests the system in as close to a tactical environment as possible.

2.3.3.1 Uninstalled MWS Testing

Uninstalled MWS DT&E allows system developers to evaluate system level performance without requiring installation on or integration with the host platform. Testing in this context includes use of cable cars and flying test beds, where the MWS hardware is present but not usually in an aircraft configuration.

2.3.3.1.1 MWS Component Testing

The manufacturer tests individual MWS hardware and software components during system development, such as uninstalled sensor field-of-view and detector sensitivity. The processor algorithm optimisation process begins with SIL testing where sensor output data from actual flight testing are recorded and

injected into the processor. This allows for repeated tests against a wide variety of backgrounds and atmospheric conditions without actually flying.

2.3.3.1.2 MWS System-Level Testing

System-level testing focuses on MWS ability to distinguish missile launch signatures from background clutter and generate a timely alarm. It can be conducted in SILs, on flying test beds, or on cable cars. A major consideration in MWS development is collecting background environment data to optimise detection and false alarm rejection algorithms. Background testing is conducted using either a flying test bed or the intended host platform to collect environmental background data using the MWS sensors. When false alarms occur, the test team will try to identify the sources and collect as much data as possible for analysis. On false alarm analysis completion the manufacturer will modify algorithms to eliminate or at least minimise the number of false alarms. A database of responses is maintained for future analysis.

Cable car testing is a special case of ground testing where the SUT is exposed to actual missile launches in a dynamic environment. An instrumented MWS is installed on a cable car with a heat source that an IR-guided missile can track. The heat source is commonly suspended some distance below the cable car to reduce the chance of the missile impacting it and the MWS. The cable car is then pulled across a valley, presenting the missile with a realistic target. When the desired test conditions are achieved, a gunner, posted a specified distance down the valley, fires a missile and the MWS response is recorded. Figure 2-18 illustrates the concept. The primary benefit of this type of testing is that an actual missile launch and fly out satisfies the spectral, temporal, and kinematic requirements for a valid declaration.

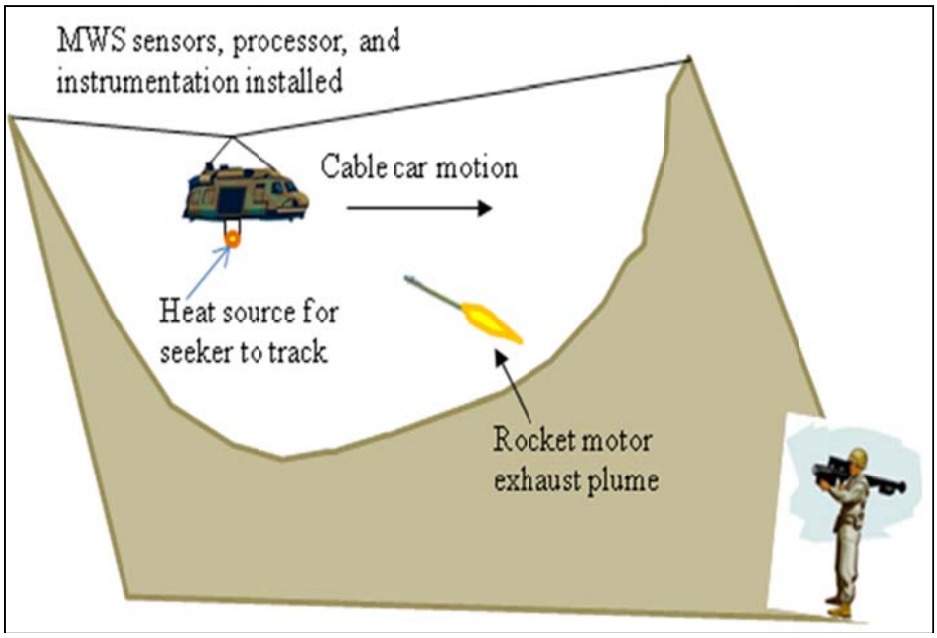

Figure 2-18: Cable Car Test Setup.

2.3.3.2 Installed MWS Testing

Much of the required MWS development and testing can be accomplished without having the MWS installed on a production representative aircraft. The final phase of MWS testing should focus on its integration with other aircraft systems and platform-specific installation characteristics, such as field of view.

Ground testing using stimulators to actuate the MWS can be used to ensure that the system has been properly installed and integrated with other aircraft systems. This type of testing is a good way to identify and correct system design deficiencies before flight testing.

Ultimately, the DT&E programme should produce results that characterise the installed MWS performance. This evaluation should focus on system's ability to detect and declare threats, warning time, false alarm susceptibility, and flare dud detection. Mobile missile plume simulators provide a valuable tool for evaluating the MWS performance in a variety of background and atmospheric conditions. This testing is often accomplished as part of an end-to-end test with countermeasures systems such as flare dispensers and directed IR countermeasures systems (arc lamp- or laser-based).

The proliferation of MANPADS and the threat they pose to modern aircraft has driven an increased demand for MWS installations on ever more platforms. Commonly, a MWS that has been developed and fielded on one platform will be chosen as the MWS for a new platform, thereby reducing development costs. T&E efforts of this nature should then focus on integration with multiple aircraft systems and provide detailed platform-specific installation characteristics.

As with other systems, reliability and maintainability are determined using statistical data acquired over time. Re-programmability is the capability of changing parameters or algorithms in the system to meet new threat scenarios, while minimising the costs of upgrading or replacing hardware.

2.4 LASER WARNING SYSTEMS (LWS)

Airborne laser warning systems are currently provided mainly for low and slow aircraft, including helicopters, although some are also being fitted to fast jet aircraft. The primary threat systems of interest are AAA systems employing a laser range finder and laser beam-riding missiles.

2.4.1 LWS Components and Operation

An LWS is functionally similar to the MWS shown in Figure 2-15. In general, LWS consist of sensors to detect the laser signal, a processor to analyse the data, and a mechanism to warn the pilot. Laser detectors are commonly integrated with the sensor modules of MWS and often share a common processor. Typically, 6 – 8 sensors are required to provide spherical coverage. Figure 2-19 shows a typical LWS.

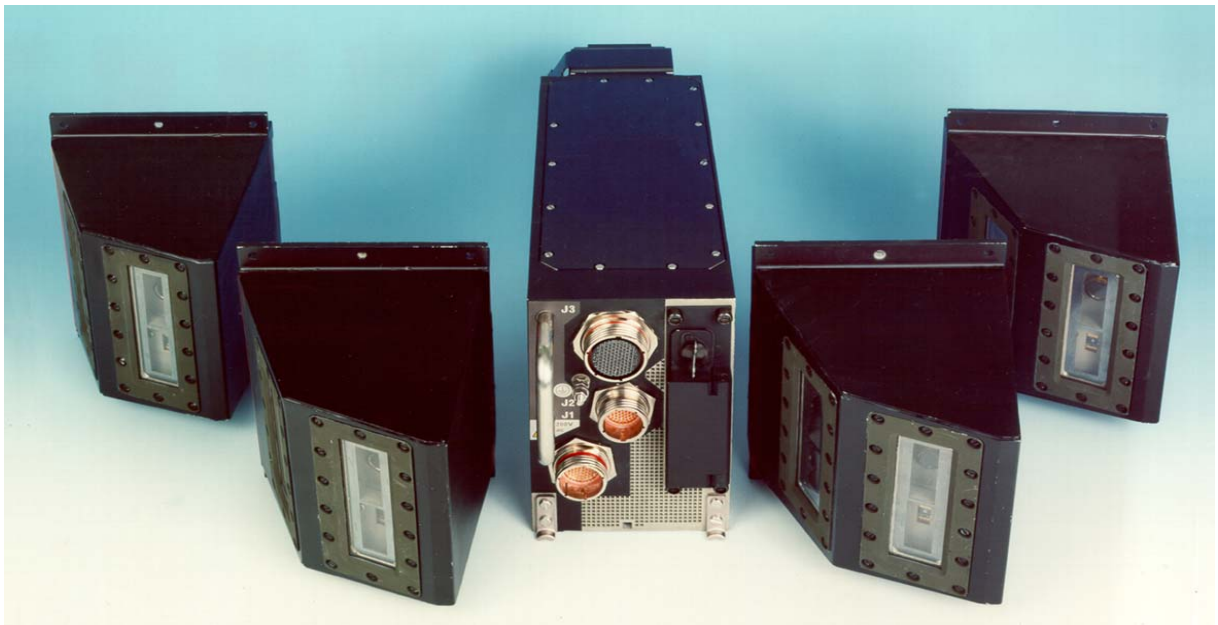

Figure 2-19: 1223 Laser Warning Receiver System – (Courtesy of SELEX GALILEO).

2.4.1.1 Sensors and Receivers

Sensor designers must consider several characteristics unique to lasers. Lasers generally operate either on a fixed wavelength or are tuneable over a relatively small wavelength range. The particular operating wavelength is determined by the lasing material. Additionally, laser beams are coherent light sources with very little beam divergence, unlike radar. When a laser is illuminating the target aircraft, the laser beam may or may not directly illuminate the sensor aperture and the sensor must be able to detect the laser energy scattering off of the airframe or through the atmosphere. Detecting atmospheric laser scatter in the presence of intense background clutter presents a significant challenge.

2.4.1.2 Processor

False alarm discrimination, while still an important consideration, is less challenging to LWS than to MWS. Laser beams are man-made phenomena and are unlikely to be mistaken for anything else. A laser beam illuminating an aircraft in a combat environment is a strong indicator of hostile intent.

2.4.1.3 Display

Laser warning displays are commonly integrated with MWS displays or other integrated threat displays. The displayed information is similar in structure to MWS symbology.

2.4.2 LWS Testing

Many of the same concepts discussed in the MWS testing section apply to lasers as well. LWS testing requires stimulating the laser sensor with a signal of sufficient fidelity to trigger a system response. The level of fidelity is driven by the test requirement. In the most basic case, flight line integration testing and system checkouts can be accomplished with a laser operating on a suitable wavelength. In other tests, the pulsed structure associated with a beam-riding missile may be required.

2.4.2.1 Uninstalled LWS Testing

The uninstalled testing is similar in concept to MWS testing.

2.4.2.1.1 LWS Component Testing

Laboratory testing measures several critical parameters. The sensitivity of the sensor at various operationally relevant wavelengths directly relates to the maximum range at which a threat system can be detected. Off-axis sensitivity is also a key consideration for laser warning sensors because they must be able to detect energy scattered through the atmosphere and/or off the airframe. Dynamic range is also an important consideration because the sensor must detect the very low energy levels associated with atmospheric scattering as well as the direct illumination of the aperture by the laser beam. Since receiver sensitivity is degraded when operated in bright sunlight, sensitivity is also measured in outdoor tests; however, the measurements obtained in this manner are not as accurate as laboratory measurements because atmospheric scintillation can cause fluctuations in the received power density.

2.4.2.1.2 LWS Level Testing

Flight tests are conducted to determine if there are problems unique to the flight environment. Significant testing can be accomplished without having the system installed on a production aircraft. Flight tests on a flying test bed are particularly useful in evaluating the maximum detection range and false alarm susceptibility in an operational environment. Maximum detection range is determined in airborne tests by flying the aircraft both towards and away from the threat, and noting where detection is obtained or lost.

2.4.2.2 Installed LWS Testing

Flight tests must be conducted to verify that neither the installation nor integration with other avionics has significantly altered system performance. Of particular note to installed system testing are compatibility with other aircraft systems, EMI, field-of-view restrictions, scattering of laser radiation from aircraft surfaces, and aircrew operational interface. Airborne tests are also conducted to ensure that the receiver can perform in an aircraft environment (vibration, temperature, pressure and EMI/EMC). Atmospheric scintillation can affect the AOA accuracy, and aircraft parts can affect the field of view. Even for quadrant detection systems, it is important to determine how the receiver handles the transitional regions between quadrants.

The laser beam rider missile is an increasing threat to aircraft. Beam rider detection presents a special challenge because of the extremely low irradiance levels involved. A beam rider simulator should be provided for ground and airborne tests; one that can produce not only the proper wavelength, but also the proper pulse coding because detection algorithms used to get good sensitivity can be affected by the pulse code format.

2.5 REFERENCES

[1] Tsui, J.B., “Microwave Receivers with Electronic Warfare Applications”, Raleigh, NC, SciTech Publishing, Inc., 2005 (ISBN 1-891121-40-5), pp. 2-3.

[2] Tsui, p. 58.

[3] Tsui, pp. 58-62.

[4] “Encyclopedia of Aerospace Engineering (2010)”, Edited by Richard Blockley and Wei Shyy. John Wiley & Sons, Ltd. ISBN: 978-0-470-75440-5. Volume 7, Chapter 376 – Pywell, M. Electronic Warfare and Defensive Aids Systems Design and Development.

[5] Anderson, R.B., Bieling, R., Strombo, G., Hunt, D. and Brown, F. “Threat Correlation to Ground Test Stimulators at the Benefield Anechoic Facility (BAF)”, U.S. Air Force T&E Days, 6-8 December 2005, Nashville, Tennessee, AIAA 2005-7659.

2.6 FURTHER READING

Adamy, D.L., EW 101: "A First Course in Electronic Warfare", Norwood, MA, Artech House, Inc., 2001, (ISBN 1-58053-169-5).

Adamy, D.L., EW 102: "A Second Course in Electronic Warfare", Norwood, MA, Artech House, Inc., 2004, (ISBN 1-58053-686-7).

Golden, A., "Radar Electronic Warfare", New York, New York, American Institute of Aeronautics and Astronautics, Inc., 1987, (ISBN 0-930403-22-3).

Hecht, J., "Understanding Lasers: An Entry Level Guide", Hoboken, NJ, John Wiley & Sons, 2001, (ISBN 0-7803-1005-5).

NATO Industrial Advisory Group SG-66 – Future Electronic Support Solutions – Digital Solutions – Final Report. NIAG-D/ASG(2001)7, November 2001.

NATO Industrial Advisory Group SG-79 – Emitter Location System (ELS) and Data Links for SEAD – Final Report. NIAG-D(2006)0009, AC/224-D(2006)0010, February 2006.

Schleher, D.C., "Electronic Warfare in the Information Age", Norwood, MA, Artech House, Inc., 1999, (ISBN 0-89006-526-8).

Skolnik, M.I., "Introduction to Radar Systems, 3rd Ed", New York, NY, McGraw-Hill, Inc., 2001, (ISBN 0-07-290980-3).

Tsui, J.B., "Digital Techniques for Wideband Receivers, 2nd Ed.", Norwood, MA, Artech House, Inc., 2001, (ISBN 1-58053-299-3).

Wiley, R.G., "*ELINT – The Interception and Analysis of Radar Signals, 2nd Ed.*", Norwood, MA, Artech House, Inc., 2006, (ISBN 1-58053-925-4).

Holt, O., Technology Survey – Missile Warning Systems. Journal of Electronic Defense, May 2010, pp. 61-67.