Chapter 4 – T&E OF EP TECHNIQUES

4.1 INTRODUCTION

This chapter describes EP techniques and procedures. A general discussion of EP testing is presented and a simplified test example is presented to illustrate how the EW test process applies. Finally, EP through Emission Control (EMCON) and associated testing are discussed.

4.2 EP TECHNIQUES AND PROCEDURES

The EW division of EP differs from the ES and EA divisions in an important way. ES and EA usually employ dedicated systems to accomplish a specific purpose. EP techniques are normally incorporated into EW and non-EW systems as a means of protection from hostile EA. EP can also be procedural in nature such as employing Operational Security (OPSEC) measures, EMCON, and spectrum management.

All unprotected sensor systems, such as radar, are vulnerable to some form of EA. For example, an unprotected airborne interceptor's FCR would be vulnerable to a basic EA technique such as a Velocity Gate Pull-Off (VGPO). VGPO is an EA technique that attempts to deceive the FCR by stealing its velocity gate and injecting false target information into the FCR. A radar designer knowing that an adversary's EA will likely attempt to accomplish a VGPO will therefore incorporate logic, i.e., Anti-VGPO (AVGPO), into the FCR to recognise that a VGPO technique is being attempted and to negate it. Techniques such as AVGPO are often called ECCM. [1],[2] This also highlights the value of OPSEC and the need to protect information about potential vulnerabilities of friendly equipment from hostile interests. When hostile EA system developers design their systems they will use all known vulnerabilities to optimise their EA technique's effectiveness. If information about potential vulnerabilities is denied to them, they need to adopt more general techniques that are usually less effective than the ones designed to exploit specific vulnerabilities of the radar.

EP techniques tend to be the result of developments of EA capabilities. Most EP techniques are defined in relation to how they counter a specific EA threat. Usually, the EP technique is some improvement in the system design that counteracts the effect(s) of a specific EA technique; therefore, it is difficult to understand the purpose of a specific EP technique without knowing the EA technique that it is designed to counteract. This close relationship between EA and EP means that EP testers must plan, conduct, and evaluate testing based on a complete understanding of both the SUT and the threats that challenge it.

The EP test requirements most often encountered will involve ECCM of airborne radars. Figure 4-1 shows a block diagram of a generic airborne radar.

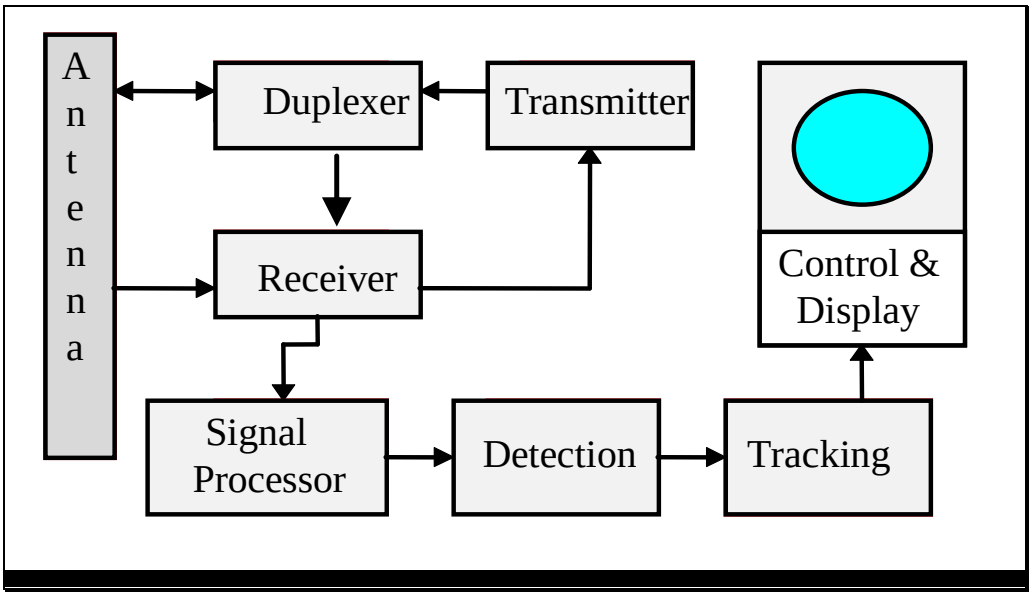

Figure 4-1: Generic Radar Block Diagram.

Each element of this radar is a potential victim of EA; therefore, some EP technique should be considered. The antenna's greatest vulnerability may be to stand-off jamming introduced through the sidelobes. The associated EP technique is to reduce sidelobes to the lowest possible level and, as is common nowadays, to equip the radar with a guard antenna which has an antenna pattern which covers the sidelobes. The radar can compare the jamming power from the two antennas and by that suppress signals introduced in the sidelobes. A similar relationship exists with the antenna's sensitivity to cross-polarised signals. If the antenna is designed for low cross-polarisation response, then it will be more robust against EA techniques that rely on jamming with cross-polarised signals.

The radar transmitter can protect against some EA techniques by having features such as frequency hopping, PRF stagger or jitter, pulse width modulation or compression, or other parametric diversity; a broad tuning range; or high transmit power. Each of these features is a valid EP technique and will require specific testing in order to characterise the radar transmitter's overall performance in a jamming environment.

Similarly, the radar receiver design can incorporate features to reduce its vulnerability to common EA techniques. High local oscillator and first Intermediate Frequency (IF) will result in increased image frequency rejection thus improving the receiver's ability to operate in a jamming scenario. Recent improvements in signal processing have led to major improvements in EP and pose significant new challenges for the EA designer. As digital signal processor components have increased in both speed and density, functions within radar signal processors have become more resistant to both deceptive and power-based EA techniques. Some features of signal processing found in modern airborne radars include programmability, high range and Doppler resolution, and signal processing reserve capability in both memory and computing resource timeline. Each of these features can result in important improvements to radar's EP capability. The primary objective of EP T&E is to characterise the radar's resistance to various EA techniques and assess its suitability for operation in an EW environment.

4.3 TESTING EP TECHNIQUES

The constant evolution of EP and EA provides some interesting challenges to the tester. As with EA, detailed knowledge of the threat is the tester's greatest resource. The following paragraphs describe

how test resources can be applied at each level to evaluate the performance and effectiveness of the EP techniques.

4.3.1 Modelling and Simulation

Many EP techniques are based on complex and sensitive circuitry in the system being protected. As such, all elements of the EW test process should be considered in planning EP tests. M&S will be of particular value in both the test planning and evaluation portions of the test process. A digital model of the SUT can be used to analyse potential effects of jamming or other EA techniques. Antenna designs can be evaluated for their sidelobe characteristics that in turn will provide insight into the system's vulnerability to noise jamming introduced into the sidelobes.

The signal processing circuits of radar systems are excellent candidates for digital models. These models can be used both in the design of the signal processing circuits and as a tool to evaluate susceptibility to various jamming techniques. Current EW industry trends are to establish standards for models that permit a compliant digital model of a system in the design phase to be evaluated in the presence of previously established threat models. This approach permits both designers and testers to assess the behaviour of a new radar system with respect to various generic and specific EA techniques. Based on the results from this step in the test process, testers can determine those conditions most likely to reveal performance limitations or other problems in the SUT.

4.3.2 Ground Test

Various laboratory or ground facility tests will prove invaluable in developmental testing of EP functions. The majority of the EA techniques that may be overcome through some form of EP are based on the characteristics of EM waveforms, not on the dynamic properties of ships, land vehicles, aircraft, or missiles. Therefore, if the SUT, such as an airborne radar, is subjected to jamming signals while in a laboratory or spread-bench environment, the results observed will usually be indicative of the eventual installed system performance. Tests in SIL and HITL facilities will permit a large number of trials, with a high degree of repeatability at a low cost. Results from these tests can be quickly and easily compared with results from the digital M&S previously completed. Differences between the model results and those obtained in the SIL or HITL should be investigated and resolved. Appropriate updates to the models used are made before progressing to more expensive and complex test conditions.

One portion of nearly all EW and avionics systems that is particularly sensitive to installed performance is the antenna or sensor aperture. For the case of RF systems, antenna performance can be significantly altered due to installation effects such as other nearby antennas acting as parasitic oscillators or other parts of the aircraft causing blockages to the antenna pattern. Tests in ISTFs can efficiently lead to the evaluation of such effects. Not all ISTFs can support the actual radiation of RF signals required for measurement of antenna system performance. The tester must always be careful to select facilities in each test category that can support the specific types of tests deemed necessary for the system of interest. For instance, if the installed performance of the antenna systems is well known but a concern exists about the integration of new signal processing circuits with other elements of an aircraft's avionics, then operation in an ISTF that permits free-space radiation of RF signals may not be necessary. A smaller facility with lesser anechoic properties will suffice. If, on the other hand, the SUT has an uncharacterised antenna system and must operate in a complex radiated electromagnetic environment, then the test team should consider using an ISTF with broad anechoic properties and a wide-operating frequency range.

4.3.3 Flight Test

Flight testing is usually the final step and should hold little potential for surprise if the previously described steps are carried out. However, it is possible that some aero-mechanical effects not simulated in

the earlier stages will cause problems. Movement of antennas due to flutter or aeroelasticity effects can result in erroneous Direction Finding (DF), ranging, or velocity determinations.

4.4 ECCM TEST ILLUSTRATION

The following example illustrates the test process for a notional airborne FCR with an EP technique designed to mitigate the effects of sidelobe jamming. Assume for this example:

- SUT is an Airborne Interceptor (AI) radar.
- A digital model of the radar and threat jammers exists.
- Radar antenna pattern has been previously characterised in both azimuth and elevation.
- Radar's primary EP technique to negate effects of barrage noise jamming is sidelobe cancellation.
- For HITLs and ISTFs, a threat jammer simulator is available with adjustable power output.

4.4.1 Test Objectives

During test planning meetings the military end user, the radar manufacturer, PSI and testers determine that the military end user is particularly interested in how the radar system will perform in the presence of SOJ barrage noise jamming. Barrage noise is an EA technique that produces broadband noise energy to mask the reflected energy from a radar. When applied by an SOJ, the noise is introduced into the radar sidelobes to mask returns that are occurring in the main beam. The success of barrage noise jamming is primarily a function of J/S. These factors will help to determine appropriate test objectives, plan test activities, and determine the data requirements to support an evaluation. The first step is to determine the test objective. There will be one simple test objective in this example to demonstrate the process. The test objective is**:** Determine the minimum jamming power required to obtain the specified J/S at the input to the radar receiver at various azimuth angles between 10 and 45 degrees off the nose of the test aircraft.

4.4.2 Pre-Test Analysis

A key to effective testing is to develop an understanding of the SUT, its intended operating environment, and the strengths and weaknesses of the threats it will encounter. Developing this understanding is the first element of pre-test analysis. As shown in Figure 4-2, there are two areas of interest defined, a 35-degree sector on the left and a 35-degree sector on the right. The jamming signal must be within the bandwidth of the radar receiver to be effective. The antenna pattern for the radar antenna will be an important consideration in determining the angular resolution for testing. For this example, it is assumed that the antenna pattern is of adequate consistency to permit measurements to be taken at 5-degree increments. The initial characterisation of the antenna pattern would have been accomplished in a measurement facility specialising in RF antenna measurements.

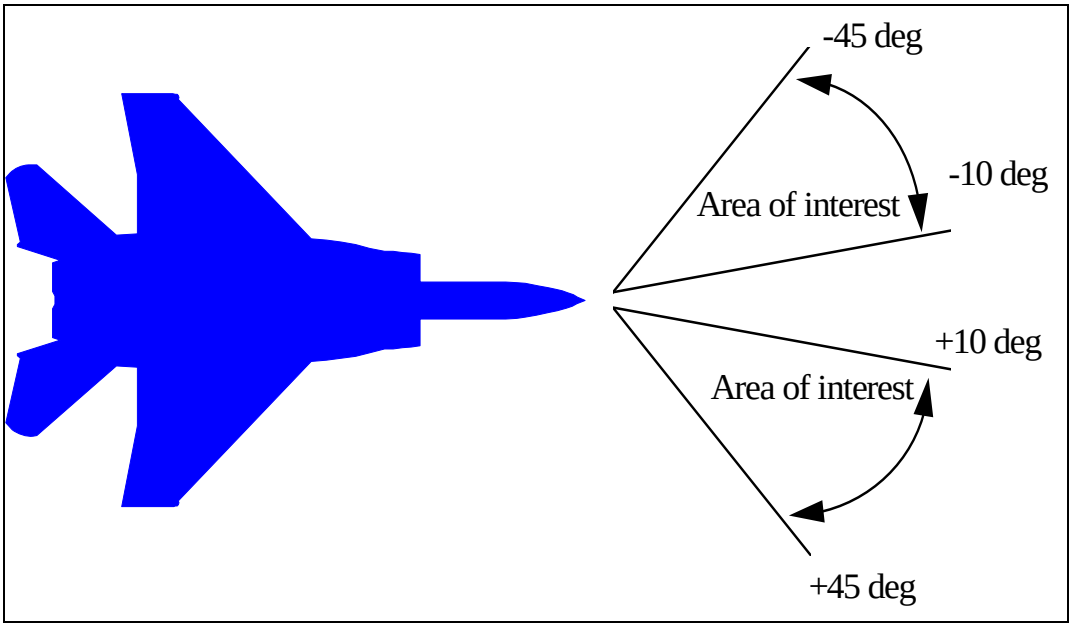

Figure 4-2: Areas of Interest.

The EP technique used in the example radar is sidelobe cancellation. This technique utilises auxiliary antenna elements to receive the jamming signal, determine its effect, and cancel that effect in the main antenna channel. In order to evaluate the effectiveness of the sidelobe canceller, the test will be conducted with and without the EP technique enabled. Since the radar antenna is a critical element in the vulnerability of the radar to stand-off jamming, all tests will be conducted with RF radiation through the antenna.

The pre-test analysis we must define the test concept, determine test points, predict outcomes, establish analytical processes that will be applied, and decide what data must be acquired. Since there is a digital model of both the SUT and the SOJ, these tools can be used to determine if there are critical angles or frequencies at which the jamming will be particularly effective, or the EP technique is particularly ineffective. The model will also be helpful in determining what data need to be collected and the requirements for range, resolution, and accuracy of that data.

4.4.3 Test Execution

The next step is to execute the test. This step will be repeated several times, using various test resource categories as the confidence in the SUT increases. The results obtained will be compared to those predicted during the pre-test analysis after each iteration. The results will be used to correct or revise the models and to resolve differences between actual and predicted results.

4.4.3.1 HITL Testing

The first tests will be accomplished in a HITL with the SUT in a ‘spread bench’ configuration permitting easy access to test points with generic laboratory test equipment such as spectrum analysers and oscilloscopes. The radar antenna, auxiliary antennas, and the jammer simulator transmit antenna will be located in a small anechoic chamber where RF radiation can be accommodated with adjustable power levels. During this testing precise measurements can be made of the actual power levels and J/S ratio at each point of interest in the antenna pattern. Data can be either hand recorded or automatically logged by the test facilities instrumentation support system.

4.4.3.2 ISTF Testing

Testing the radar in its installed configuration under precisely controlled conditions can be accomplished in an ISTF. This will be an important test since it will be the first opportunity to measure the system performance with installation effects accounted for. Both facility and aircraft instrumentation systems should be utilised during this phase of testing. It will provide a correlation between the test aircraft instrumentation system that will be used during flight test and the facility instrumentation that is the primary data acquisition source during the ISTF tests. Large amounts of data can be easily collected in this environment with a high degree of repeatability. These data will form the basis for an accurate statistical baseline of system performance. Both HITL and ISTF testing support a tightly controlled RF environment where only the signals of interest are present. This will not be the case in flight test.

4.4.3.3 Flight Test

The final phase of the test project will be conducted in flight on an OAR. Three aircraft will be used. The first aircraft will simulate the actions of an adversarial SOJ aircraft. The second aircraft will represent a threat target aircraft. The third aircraft, the test aircraft, will carry the SUT and be instrumented to provide either onboard recording or telemetry of critical parameters needed for evaluation of the SUT. Time Space Positioning Information (TSPI) for all three aircraft is required. These data will be used during post test analysis to determine the exact position of the jammer and target with respect to the SUT radar antenna.

Flight profiles for all three aircraft will be established to maintain the jammer aircraft within the 35-degree sector on either the left or right side of the test aircraft. During this phase of testing the test objective is modified to provide a more operational focus. The objective is now redefined as: *Determine the minimum jamming power required to defeat the radar's ability to detect, track, and display a one-square-meter target with stand-off jamming at various azimuth angles between 10 and 45 degrees off the nose of the test aircraft.* This revised objective creates a number of new requirements. The objective describes a target aircraft with a RCS of one square metre. While the aircraft available to serve as a target may not directly meet this requirement, data obtained during testing can be corrected for any difference in the RCS. This does, however, require high accuracy and resolution TSPI capability on the open-air range. Also, the primary indicator of jamming effectiveness will now be the pilot of the test aircraft. When the jamming is sufficient to obscure the target on the pilot's display, then we will consider that the EP technique is ineffective. While the precise data gathered during the previous phases of testing are necessary to efficiently develop and improve the SUT, these operational data will ultimately determine whether or not the system will be acquired and fielded.

4.4.4 Evaluation

The system manufacturer, PSI and the military end user may have different views of what the results mean; the manufacturer may use the results of testing to demonstrate that all specifications have been satisfied, while the military end user may determine that based on test results, the system will not satisfy the operational requirements. Due to the differences in interpretation of test results and the potential economic and operational impacts associated with these interpretations, evaluation is one of the most critical and controversial elements of the test process. To the greatest extent possible, all parties involved in the development and test of a system reach agreement prior to the start of testing as to what data will be used in the evaluation, and what calculations and statistics will be applied to the data. Finally, everyone must reach agreement as to exactly what constitutes success or failure.

For the example test the problem was bounded to some degree in the test objectives' statement. For the flight test objective, only data acquired when the jamming aircraft is within the 10 to 45-degree sector on either side of the test aircraft will be used. The evaluation of the test results will generally be communicated through an interim or final report. This report should clearly state any constraints or

limitations on the testing, what was observed, what was concluded from those observations, and any recommendations resulting from those conclusions. If, based on the evaluation, the decision makers can verify that any operational risks associated with fielding the system are acceptable, and that user needs are adequately satisfied, then testing can be declared complete. If the evaluation leads to a conclusion that the SUT requires additional improvement prior to acceptance or fielding, then another cycle of the test process will occur.

4.5 EP THROUGH EMISSIONS CONTROL CAPABILITIES

In addition to the ECCM techniques discussed above, there are passive approaches to EP. One of the most significant is EMCON. EMCON addresses both intentional and unintentional emissions.

4.5.1 EMCON Concepts

The most direct means of limiting an adversary's ability to apply EA techniques is by rigid control of friendly EMCON. As a simple example of this process, consider an ARM targeted at a friendly radar site. Since the ARM homes in on the RF radiation from the radar, it will lose that guidance if the radar transmissions are ceased. The planned cessation of the radar emissions would be considered a form of EMCON and would clearly be an effective method of EP.

IADS typically contain passive RF sensors to detect and track hostile aircraft. These sensors can track both intentional and unintentional RF radiation coming from the air vehicle. An air vehicle should have an RF management system to control all onboard RF transmissions. Unnecessary emissions should be eliminated and in the event that they cannot be eliminated they should be characterised so that their effects can be procedurally mitigated.

4.5.2 Testing for Unintentional Emissions and EMCON Capabilities

Virtually all electrical and electronic components on an aircraft have the potential to radiate or re-radiate RF energy, which may be detected and intercepted by an adversary. While some of these potential emissions can be observed during early phases of development, it is most often the case that they are discovered after all systems are installed and integration in the host platform has begun. As a result, ISTFs are frequently used to characterise these unintended emissions.

4.5.2.1 Ground Tests

Large anechoic chambers are most useful in conducting tests to determine the exact nature and source of all signals radiated from an aircraft during operation. One approach frequently used is to establish a matrix of all possible switch combinations and then step through each configuration while using a calibrated, high sensitivity receiver to sweep through the entire range of frequencies to be evaluated. If energy is detected with a particular combination of aircraft equipment energised, then engineers can isolate the exact source. At this point both the user and designer must determine what action is to be taken to either reduce the emission or accept the condition.

While this type of testing is time consuming and requires specialised facilities and equipment, it has proven to be the most efficient manner to locate specific sources of unintentional emissions. Of course, intentional emissions can also be used to detect, locate, and engage an aircraft and must also be characterised. Again, the anechoic chamber is an efficient and cost effective location for this task.

4.5.2.2 Flight Tests

The results from ISTF tests can be used along with digital models of threat systems to determine an aircraft's susceptibility to such threats. In many cases actual flight test against simulated threats and

RF measurement systems can be employed to evaluate susceptibility. While determination of the exact source of the offending radiation may be difficult or impossible in an OAR environment, flight tests do provide the most realistic conditions. It is not unusual to regress to ISTF testing after the first round or two of flight testing. This iterative approach will generally converge on the best balance of emissions reduction and operational utility. Operational tests and some developmental tests on an OAR are accomplished using operationally representative flight profiles against typical threat laydowns. Through careful manipulation of the flight profile relative to the threat simulator placements, specific conditions thought likely to occur in actual combat can be evaluated. The analysis of system performance during such testing provides the best overall assessment of military worth.

4.6 REFERENCES

[1] Skolnik, M.I. (Ed.) Radar Handbook, 3rd Edition. McGraw Hill, Boston, MA, 2008. ISBN 0-07-057913-X. Chapter 9 Electronic Counter-Countermeasures, by A. Farina.

[2] Johnson, S.L. Radar Electronic Counter-Countermeasures. Artech Radar Library, 1980, ISBN 978-0-89006-079-7.

4.7 FURTHER READING

Chrzanowski, E.J., “Active Radar Electronic Countermeasures”, Norwood, MA, Artech House, Inc., 1990, ISBN 0-89006-290-0.

Golden, A., “Radar Electronic Warfare”, New York, New York, American Institute of Aeronautics and Astronautics, Inc., 1987, (0-930403-22-3).

Maksimov, M.V. et al. Radar Anti-Jamming Techniques. Artech House, 1979. ISBN 0-89006-078-9.

Van Brunt, L.B., “Applied ECM”, Dunn Loring, VA, EW Engineering, Inc., Vol. 1 (1978, ISBN 0-931728-00-2); Vol. 2 (1982, ISBN 0-931728-01-0); Vol. 3 (1995, ISBN 0-931728-03-7).

Weigand, R.J., “Radar Electronic Countermeasures System Design”, Artech House, Norwood, MA, 1991, ISBN 0-89006-381-8.