CHAPTER 5

Some Fundamentals of Acoustics

According to the experiences related in Chapter 1, combustion instabilities may be regarded as unsteady motions closely approximated as classical acoustical motions with perturbations due ultimately to combustion processes. That view, initially an empirical conclusion, motivated the general form of the analytical framework constructed in Chapter 4. Relatively little knowledge of classical acoustics is required to understand and apply that construction formally.

However, interpretation of the details of observed behavior, and effective use of the theory to develop accurate representations of actual motions in combustors require firm understanding of the fundamentals of acoustics. The purpose of this chapter is to provide a condensed discussion of the basic parts of the subject most relevant to the main subject of this book. We therefore ignore those processes distinguishing combustion chambers from other acoustical systems, and restrict attention to the Problem O defined in Sections 3.3.3 and 3.4.

5.1. The Linearized Equations of Motion; The Velocity Potential

We will be concerned here with unsteady motions in a pure non-reacting gas at rest. The governing equations are (3.46) for Problem O, Classical Acoustics, leading to the corresponding wave equation and its boundary condition, equations (3.52) with h_O and f_O given by (3.60)a,b for constant average density $\bar{\rho}$ and written with dimensional variables:

$$\begin{aligned} \nabla^2 p' - \frac{1}{\bar{a}^2}\frac{\partial^2 p'}{\partial t^2} &= \nabla\cdot\boldsymbol{\mathcal{F}}' - \frac{1}{\bar{a}^2}\frac{\partial \mathcal{P}'}{\partial t} \\ \hat{\mathbf{n}}\cdot\nabla p' &= -\bar{\rho}\frac{\partial \mathbf{u}'}{\partial t}\cdot\hat{\mathbf{n}} - \boldsymbol{\mathcal{F}}'\cdot\hat{\mathbf{n}} \end{aligned} \tag{5.1)a,b}$$

In the absence of condensed material, the definitions (A.34) and (A.58) of the unperturbed functions $\boldsymbol{\mathcal{F}}$ and $\mathcal{P}$ are:

$$\boldsymbol{\mathcal{F}} = \nabla\cdot\overleftrightarrow{\boldsymbol{\tau}}_v + \mathbf{m}_e - \mathbf{u}w_e \tag{5.2}$$

$$\mathcal{P} = \frac{R}{C_v}\left[\overleftrightarrow{\boldsymbol{\tau}}_v\cdot\nabla\cdot\mathbf{u} - \nabla\cdot\mathbf{q} - Q_e\right] + RTw_e \tag{5.3}$$

where

$\overleftrightarrow{\boldsymbol{\tau}}_v$: viscous stress tensor (force/area)

$\mathbf{q}$: rate of conductive heat transfer (energy/area-s)

$\mathbf{m}_e$: rate of momentum addition by external sources (mass-velocity/volume-s)

w_e : rate of mass addition by external sources (mass/volume-s)

Q_e : rate of energy addition by external sources (energy/volume-s)

Thus the function $\boldsymbol{\mathcal{F}}$ contains all processes causing changes of momentum of the gas, except for that due to internal pressure differences; and $\mathcal{P}$ represents all sources of energy addition except that due to internal work by the pressure, accounted for by the term $p\nabla\cdot\mathbf{u}$ in equation (A.47). The linearized forms of the

source terms will be constructed as required for specific problems. For most of this chapter we will treat only problems for which h_O and f_O vanish, giving the simplest equations for classical acoustics,

$$\begin{aligned} \nabla^2 p' - \frac{1}{\bar{a}^2}\frac{\partial^2 p'}{\partial t^2} &= 0 \\ \hat{\mathbf{n}} \cdot \nabla p' &= 0 \end{aligned} \tag{5.4)a,b}$$

With no sources in the volume or on the boundary, motions exist only for initial value problems in which the pressure and its time derivative are specified at some initial time, t_0.

In this case, the wave equation is used to describe freely propagating waves following an initial disturbance or, when the boundary condition (5.4)b is enforced, the normal modes for a volume enclosed by a rigid boundary. The condition $\hat{\mathbf{n}} \cdot \nabla p' = 0$ means that the velocity normal to the boundary is zero, because the acoustic velocity is computed from the acoustic momentum (3.46)b written in dimensional form with $\boldsymbol{\mathcal{F}} = 0$:

$$\bar{\rho}\frac{\partial \mathbf{u}'}{\partial t} = -\nabla p' \tag{5.5}$$

so

$$\hat{\mathbf{n}} \cdot \nabla p' = \bar{\rho}\frac{\partial}{\partial t}\left(\hat{\mathbf{n}} \cdot \mathbf{u}'\right)$$

from which

$$\frac{\partial}{\partial t}\left(\hat{\mathbf{n}} \cdot \mathbf{u}'\right) = -\frac{1}{\bar{\rho}}\hat{\mathbf{n}} \cdot \nabla p' = 0 \tag{5.6}$$

Hence $\hat{\mathbf{n}} \cdot \mathbf{u}' = 0$ always

We have just derived the equations for classical acoustics by specializing the general equations of unsteady motion. It is also useful to arrive at the same conclusion in a slightly different way, beginning with the equations for inviscid motion in a homogeneous medium:

Conservation of Mass:
$$\frac{\partial \rho}{\partial t} + \nabla \cdot (\rho \mathbf{u}) = 0 \tag{5.7}$$

Conservation of Momentum:
$$\rho\frac{\partial \mathbf{u}}{\partial t} + \rho \mathbf{u} \cdot \nabla \mathbf{u} + \nabla p = 0 \tag{5.8}$$

Conservation of Energy:
$$\rho\frac{\partial}{\partial t}\left(e + \frac{1}{2}u^2\right) + \rho \mathbf{u} \cdot \nabla\left(e + \frac{1}{2}u^2\right) + \nabla \cdot (p\mathbf{u}) = 0 \tag{5.9}$$

Equation of State:
$$p = \rho R T \tag{5.10}$$

Remove the kinetic energy from the energy equation by subtracting $\mathbf{u}\cdot$ (momentum equation) to give

$$\rho\frac{De}{Dt} + p\nabla \cdot \mathbf{u} = 0 \tag{5.11}$$

where $\frac{D}{Dt} = \frac{\partial(\quad)}{\partial t} + \mathbf{u} \cdot \nabla(\quad)$. Because all irreversible processes have been ignored the entropy of a fluid element remains constant, $\frac{Ds}{Dt} = 0$, a result that follows directly by substituting the mass and energy equations in the thermodynamic definition of the entropy of an element:

$$\rho\frac{Ds}{Dt} = \rho\frac{De}{Dt} - \frac{p}{\rho}\frac{D\rho}{Dt} = -p\nabla \cdot \mathbf{u} + \frac{p}{\rho}\left(\rho\nabla \cdot \mathbf{u}\right) = 0 \tag{5.12}$$

Taking the density to be a function of pressure and entropy, we can write for an isentropic process

$$d\rho = \left(\frac{\partial \rho}{\partial s}\right)_p ds + \left(\frac{\partial \rho}{\partial p}\right)_s dp = \left(\frac{\partial \rho}{\partial p}\right)_s dp = \frac{1}{a^2} dp \tag{5.13}$$

where

$$a^2 = \left(\frac{\partial \rho}{\partial p}\right)_s \tag{5.14}$$

will turn out to be the speed of propagation of small disturbances, the 'speed of sound'. With this definition, we can rewrite the continuity equation (5.7) for the pressure:

$$\frac{\partial p}{\partial t} + \rho a^2 \nabla \cdot \mathbf{u} + \mathbf{u} \cdot \nabla p = 0 \tag{5.15}$$

This result is quite general: in particular, its derivation did not involve using the special characteristics of a perfect gas.

Alternatively, we may derive this equation for the special case of a perfect gas for which $de = C_v(T)dT$ and the equation of state is (5.10). Add T times (5.7) to C_v^{-1} times (5.11) with $de = C_v dT$; then use (5.10) to find

$$\frac{\partial p}{\partial t} + \left(1 + \frac{R}{C_V}\right) p \nabla \cdot \mathbf{u} + \mathbf{u} \cdot \nabla p = 0 \tag{5.16}$$

But $R = C_p - C_v$, so $R/C_v = \gamma - 1$ for a perfect gas. Comparison of (5.14) and (5.15) gives the formula for the speed of sound in a perfect gas:

$$a^2 = \sqrt{\frac{\gamma p}{\rho}} = \sqrt{\gamma R T} \tag{5.17}$$

For an isentropic process of a perfect gas, equation (5.13) can be integrated,

$$d\rho = a^2 dp = \frac{\rho}{\gamma p} dp$$

which gives

$$p = p_0 \left(\frac{\rho}{\rho_0}\right)^\gamma \tag{5.18}$$

where ρ_0, p_0 are constant reference values.

We may now eliminate the density from the momentum equation (5.8) to find

$$\frac{\partial \mathbf{u}}{\partial t} + \mathbf{u} \cdot \nabla \mathbf{u} + \frac{1}{\rho_0} \left(\frac{p_0}{p}\right)^{1/2} \nabla p = 0 \tag{5.19}$$

Finally, we obtain the wave equation for the pressure by differentiating (5.16) with respect to time and substituting (5.19) and $a^2 = \gamma p/\rho$:

$$\frac{\partial^2 p}{\partial t^2} - a_0^2 \frac{p}{p_0} \nabla \cdot \left[\frac{\nabla p}{(p/p_0)^{1/\gamma}}\right] = \gamma p \nabla \cdot (\mathbf{u} \cdot \nabla \mathbf{u}) - \gamma \frac{\partial p}{\partial t} \nabla \cdot \mathbf{u} - \frac{\partial}{\partial t} (\mathbf{u} \cdot \nabla p) \tag{5.20}$$

The boundary condition is defined by taking the component of (5.19) normal to the boundary:

$$\hat{\mathbf{n}} \cdot \nabla p = -\left(\frac{p}{p_0}\right)^{1/2} \rho_0 \left[\hat{\mathbf{n}} \cdot \frac{\partial \mathbf{u}}{\partial t} + \hat{\mathbf{n}} \cdot \nabla (\mathbf{u} \cdot \nabla \mathbf{u})\right] \tag{5.21}$$

Equation (5.20) and its boundary condition are easily linearized by assuming that the gas is at rest and that the fluctuations are all of the same order. To second order in the fluctuations we find

$$\begin{aligned}\frac{\partial^2 p'}{\partial t^2} - a_0^2 \nabla^2 p' = &\left\{ p_0 \nabla \cdot (\mathbf{u}' \cdot \nabla \mathbf{u}') - \gamma \frac{\partial p'}{\partial t} \nabla \cdot \mathbf{u}' - \frac{\partial}{\partial t} (\mathbf{u}' \cdot \nabla p') \right\} \\ &+ \rho_0 \left\{ (\gamma - 1) \left(\frac{p'}{p_0} \right) \nabla^2 \left(\frac{p'}{p_0} \right) - \left(\nabla \frac{p'}{p_0} \right)^2 \right\}\end{aligned} \tag{5.22}$$

$$\hat{\mathbf{n}} \cdot \nabla p' = -\rho_0 \frac{\partial \mathbf{u}'}{\partial t} \cdot \hat{\mathbf{n}} - \rho_0 \left\{ \frac{1}{\gamma} \left(\frac{p'}{p_0} \right) \frac{\partial \mathbf{u}'}{\partial t} \cdot \hat{\mathbf{n}} + \hat{\mathbf{n}} \cdot (\mathbf{u}' \cdot \nabla \mathbf{u}') \right\} \tag{5.23}$$

Equations (5.4)a,b are recovered when the second order terms are neglected and $\mathbf{u}' \cdot \hat{\mathbf{n}} = 0$.

5.1.1. The Velocity Potential. It is often convenient to introduce scalar and vector potentials Φ and $\mathbf{A}$ from which the velocity is found by differentiation (Bachelor, 1967):

$$\mathbf{u} = -\nabla \Phi + \nabla \times \mathbf{A}$$

With this representation, the dilatation and curl (rotation) of the velocity field are separated:

$$\nabla \cdot \mathbf{u}' = -\nabla^2 \Phi \ ; \quad \nabla \times \mathbf{u}' = \nabla \times \nabla \times \mathbf{A} \tag{5.24}$$

In general, both potentials are required if the mean velocity is non-zero or sources are present in the flow. The boundary conditions may also induce non-zero rotational flow. Here only the scalar potential is required for small amplitude motions because in that limit, the classical acoustic momentum is (5.5); taking the curl with uniform average density gives

$$\bar{\rho} \frac{\partial}{\partial t} (\nabla \times \mathbf{u}') = -\nabla \times (\nabla p') = 0$$

Hence if $\nabla \times \mathbf{u}' = 0$ initially, it remains so and we can take $\mathbf{A} = 0$.

The acoustic equations for momentum, (3.46)b and (3.46)d in dimensional variables with $\boldsymbol{\mathcal{F}}' = \mathcal{P}' = 0$ are

$$\begin{aligned}\frac{\partial \mathbf{u}'}{\partial t} + \frac{1}{\bar{\rho}} \nabla p' &= 0 \\ \frac{\partial p'}{\partial t} + \gamma \bar{\rho} \nabla \cdot \mathbf{u}' &= 0\end{aligned} \tag{5.25)a,b}$$

Differentiate the first with respect to time and insert the second to give the wave equation for the velocity fluctuation,

$$\frac{\partial^2 \mathbf{u}'}{\partial t^2} - \bar{a}^2 \nabla^2 \mathbf{u} = 0 \tag{5.26}$$

Now substitute $\mathbf{u}' = -\nabla \Phi$ to give

$$\nabla \left[\frac{\partial^2 \Phi}{\partial t^2} - \bar{a}^2 \nabla^2 \Phi \right] = 0$$

which is satisfied if the terms in brackets are a function of time only, so

$$\frac{\partial^2 \Phi}{\partial t^2} - \bar{a}^2 \nabla^2 \Phi = f(t) \tag{5.27}$$

The right-hand side represents a source field for the potential, uniform over all space. We may absorb $f(t)$ by defining a new potential $\Phi_1 = \Phi + \int^t dt' \int^{t'} f(t_1) dt_1$ and relabel $\Phi_1 \to \Phi$ to find[1] the wave equation for Φ:

$$\frac{\partial^2 \Phi}{\partial t^2} - \bar{a}^2 \nabla^2 \Phi = 0 \tag{5.28}$$

[1] Alternatively, one can reason that when the velocity is found by taking the gradient of $\Phi + \iint f$, the term in f contributes nothing and hence can be simply dropped. The desired solution is unaffected by setting $f = 0$.

When the velocity potential is used, the acoustic velocity is calculated with $\mathbf{A} = 0$

$$\mathbf{u}' = -\nabla\Phi \tag{5.29}$$

The acoustic pressure is found by setting $\mathbf{u}' = -\nabla\Phi$ in the momentum equation (5.25)a, giving

$$\nabla\left(-\frac{\partial\Phi}{\partial t} + \frac{1}{\bar{\rho}}p'\right) = 0$$

This solution is satisfied if the terms in parentheses are a function of t only, $g(t)$, so

$$p' = \bar{\rho}\left(\frac{\partial\Phi}{\partial t} + g(t)\right) \tag{5.30}$$

As above, we may define a new potential $\Phi(t) + \int^t g(t')dt' = \Phi_1(t)$ and hence absorb $g(t)$ so we may redefine $\Phi_1 \to \Phi$ and

$$p' = \bar{\rho}\frac{\partial\Phi}{\partial t} \tag{5.31}$$

The conditions under which the acoustic field can be completely described by a velocity potential alone are precise and, so far as problems involving combustion are concerned, very restrictive. Any analysis or theory based on the velocity potential alone must also include demonstration that the vector potential can be ignored, i.e. set equal to a constant or zero. In general, the presence of a non-uniform mean flow field and various kinds of sources in the problems we are concerned with in this work, require that the velocity field be derived from both scalar and vector potentials. Use of the unsteady pressure as the primary flow variable provides a simpler approach for many purposes, but, as we will find later, apparently possesses unavoidable fundamental limitations.

5.2. Elementary Solutions to the Linear Wave Equation

The basic property of linear problems is that the principle of superposition applies. Solutions for complicated problems can often be constructed by superposing elementary solutions. Probably the most serious practical difficulty in the use of most methods of solution arises with the need to find solutions for volumes and boundaries not being simple shapes. Hence the basic solutions discussed briefly in this section are rarely usable directly. However, with their simplicity comes the opportunity to understand certain properties of wave motions generally.

5.2.1. Plane Waves. Choose x to be the direction of propagation. Hence the wave fronts, or planes of constant phase, are normal to the x-axis. The wave equation is

$$\frac{\partial^2 p'}{\partial t^2} - \bar{a}^2\frac{\partial^2 p'}{\partial x^2} = 0 \tag{5.32}$$

which can be factored in the form when $\bar{a}$ is constant,

$$\left(\frac{\partial}{\partial t} + \bar{a}\frac{\partial}{\partial x}\right)\left(\frac{\partial}{\partial t} - \bar{a}\frac{\partial}{\partial x}\right)p' = 0 \tag{5.33}$$

A general solution has the form

$$p'(x;t) = f(x + \bar{a}t) + g(x - \bar{a}t) \tag{5.34}$$

where:

$f(x + \bar{a}t)$ represents a wave traveling to the *left*

$g(x - \bar{a}t)$ represents a wave traveling to the *right*

The density follows from the linear relation for small amplitude isentropic motions,

$$\rho' = \frac{\bar{p}}{\gamma}\frac{p'}{\bar{p}} = \frac{1}{\bar{a}^2}\left[f(x+\bar{a}t) + g(x-\bar{a}t)\right] \tag{5.35}$$

and the velocity follows upon integration of the linear momentum equation:

$$\frac{\partial u'}{\partial x} = -\frac{1}{\gamma\bar{p}}\frac{\partial p'}{\partial x} = \frac{\bar{a}}{\gamma\bar{p}^2}\left[f'(x+\bar{a}t) - g'(x-\bar{a}t)\right] \tag{5.36}$$

Hence

$$u' = -\frac{\bar{a}}{\gamma\bar{p}}\left[f(x+\bar{a}t) + g(x-\bar{a}t)\right] \tag{5.37}$$

The important relations follow from comparison of (5.34) and (5.37):

$$\begin{aligned} &\text{For a wave traveling to the } \textit{right}\text{:} \quad u' = \frac{p'}{\bar{\rho}\bar{a}} \\ &\text{For a wave traveling to the } \textit{left}\text{:} \quad u' = -\frac{p'}{\bar{\rho}\bar{a}} \end{aligned} \tag{5.38)a,b}$$

Interpretation of these formulas is easily established by considering a compressive wave, an abrupt increase of pressure. If the front travels to the right into a gas at rest, u' is positive, i.e. to the right. Due to the acceleration of gas by the rising pressure, the motion of the gas is in the same direction as the progression of the front. Thus, a compressive disturbance traveling to the left is followed by leftward motion of the gas. Similarly, (5.38) show that an expansion or rarefaction disturbance produces motion of the gas opposite to that of the wave.

The initial value problem illustrates well the use of the general solution (5.34).

Problem: Find the subsequent motion given the initial conditions on the distribution of pressure and its rate of change:

$$\begin{aligned} p'(x;0) &= P(x) \\ \frac{\partial p'}{\partial t}(x;0) &= Q(x) \end{aligned} \qquad (t=0) \tag{5.39)a,b}$$

Solution to the problem means finding the functions $f(x+\bar{a}t)$ and $g(x-\bar{a}t)$ by applying (5.39) to (5.34) to give

$$\begin{aligned} f(x) + g(x) &= P(x) \\ \bar{a}\left[f'(x) - g'(x)\right] &= Q(x) \end{aligned} \tag{5.40}$$

Simple manipulation (see, for example, Sneddon 1957) leads to

$$p'(x;t) = \frac{1}{2}\left[P(x+\bar{a}t) + P(x-\bar{a}t)\right] + \frac{1}{2\bar{a}}\int_{x-\bar{a}t}^{x+\bar{a}t} Q(\xi)d\xi \tag{5.41}$$

This result is a general solution to the initial value problem. As an illustration, consider an initial stationary pulse of pressure, so $\partial p/\partial t = 0$, Figure 5.1. Because of the pressure differences on both edges, for $t > 0$, the pulse splits into two pulses traveling to the left and right, each having amplitude equal to half the initial amplitude. Both the pressure and velocity disturbances are non-zero within the pulses and zero outside.

For applications to waves in a chamber, the ability to satisfy boundary conditions is essential. The solution (5.34), for example, can be used to represent incidence and reflection from a planar surface bounding a semi-infinite space and an initial rectangular pulse, Figure 5.2. Now the initial condition is (5.39) with

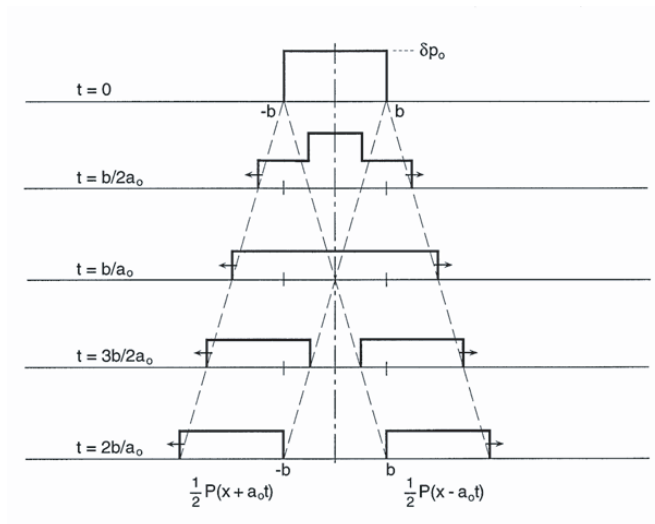

FIGURE 5.1. Wave motions subsequent to an initial pressure pulse at rest.

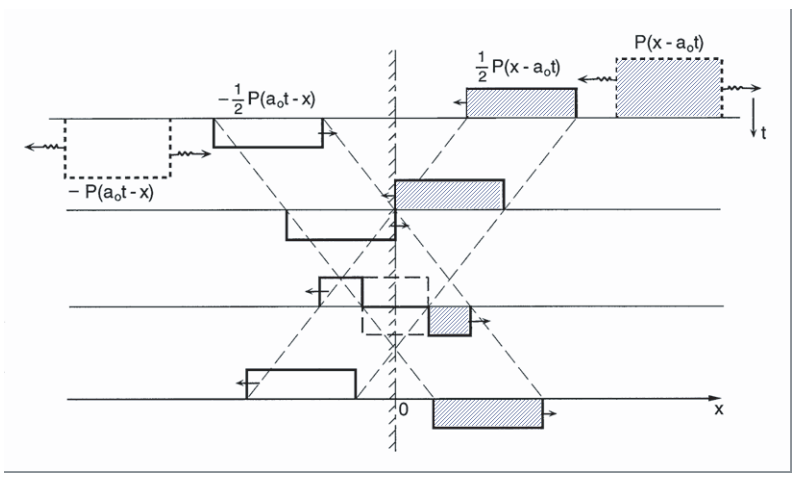

FIGURE 5.2. Reflection of a pressure pulse from a rigid surface.

$Q = 0$ and $P(x;0)$ representing a rectangular pulse located some distance to the right of the surface at $x = 0$. The solution (5.41) must satisfy the boundary condition at $x = 0$ for all times:

$$\begin{aligned} p'(0;t) &= 0 \\ \frac{\partial p'}{\partial t}(0;t) &= 0 \end{aligned} \qquad (x = 0;\ t \geq 0) \tag{5.42}$$

Note that the 'surface' here is not a physically rigid surface but has been chosen as a convenience to require that the pressure disturbance always vanish there. The solution (see Sneddon 1957) is

$$p'(x;t) = \begin{cases} \frac{1}{2}\left[P(x+\bar{a}t) + P(x-\bar{a}t)\right] & x \geq \bar{a}t \\ \frac{1}{2}\left[P(x+\bar{a}t) - P(x-\bar{a}t)\right] & x \leq \bar{a}t \end{cases} \tag{5.43}$$

This result represents the wave system arising, the splitting of the initial pulse and its image system in the space to the left of $x = 0$. Thus the formalism has led to a special case of the method of images. The behavior of pulses in a combustor is a practical application of this method.

5.2.2. Spherical Waves. Although it is often helpful to regard processes generating pressure waves as distributions of point sources, we will rarely use this point of view explicitly, because we will usually deal directly with continuous distributions (the functions h introduced Section 3.4). Nevertheless it is important to understand the fundamental differences between elementary planar and spherical waves. The wave equation for spherical waves is (5.4)a written in spherical coordinates with no dependence on the polar and azimuthal angles (e.g. see Sneddon 1957, Landau and Lifschitz 1959, and many other standard references):

$$\frac{\partial^2 p'}{\partial t^2} - \bar{a}^2 \frac{1}{r^2}\left(r^2 \frac{\partial p'}{\partial r}\right) = 0 \tag{5.44}$$

This equation is transformed to the equation for planar waves by writing p' as

$$p'(r;t) = \frac{1}{r}\psi(r;t) \tag{5.45}$$

Then (5.44) becomes

$$\frac{\partial^2 \psi}{\partial t^2} - \bar{a}^2 \frac{\partial^2 \psi}{\partial r^2} = 0 \tag{5.46}$$

Hence a general solution for the pressure has the form

$$p'(r;t) = \frac{1}{r}\left[F(\bar{a}t + r) + G(\bar{a}t - r)\right] \tag{5.47}$$

where:

$F(\bar{a}t + r)$ represents an inward traveling wave

$G(\bar{a}t - r)$ represents an outward traveling wave

Corresponding to the initial value problem solved in the preceding section, we seek a solution subject to the initial conditions:

$$\begin{aligned} p'(r;0) &= V(r) \\ \frac{\partial p'}{\partial t}(r;0) &= W(r) \end{aligned} \qquad (t = 0,\ \text{all } r) \tag{5.48}$$

We required p' to be finite at the origin, $r = 0$, so

$$\begin{aligned} [p'(r;t)]_{r\to 0} &= \operatorname*{Lim}_{r\to 0} \frac{1}{r}\left[F(\bar{a}t + r) + G(\bar{a}t - r)\right] < \infty \\ &= \operatorname*{Lim}_{r\to 0} \frac{1}{r}\left[F(\bar{a}t) + G(\bar{a}t)\right] < \infty \end{aligned}$$

This condition is satisfied only if

$$G(\xi) = -F(\xi)$$

and the general solution takes the form

$$p'(r;t) = \frac{1}{r}\left[F(\bar{a}t + r) + F(\bar{a}t - r)\right] \tag{5.49}$$

To satisfy the initial conditions (5.48) the function $F(\xi)$ must satisfy the two equations

$$\begin{aligned} F(\xi) - F(-\xi) &= \xi V(\xi) \\ F'(\xi) - F'(-\xi) &= \frac{1}{\bar{a}}\xi W(\xi) \end{aligned} \tag{5.50)a,b}$$

If the medium is initially at rest everywhere, then $W = 0$. Corresponding to (5.43), the solution for spherical waves is

$$p'(r;t) = \frac{1}{2r}\begin{cases}(\bar{a}t + r)V(\bar{a}t + r) - (\bar{a}t - r)V(\bar{a}t - r) & (r < \bar{a}t)\\ (\bar{a}t + r)V(\bar{a}t + r) + (r - \bar{a}t)V(r - \bar{a}t) & (r > \bar{a}t)\end{cases} \tag{5.51}$$

For example, suppose that a small spherical region of radius r_0 about the origin has uniform increased pressure δp initially, so

$$V(\xi) = \begin{cases}\delta p & 0 < \xi \le r_0\\ 0 & r_0 < \xi\end{cases}$$

Then (5.51) gives

$$\begin{aligned} p'(r;t) &= \frac{1}{2r}(\bar{a}t - r) \times \begin{cases}\delta p & 0 < (\bar{a}t - r) \le r_0\\ 0 & (\bar{a}t - r) < \xi\end{cases}\\ p'(r;t) &= -\frac{1}{2r}(r - \bar{a}t) \times \begin{cases}\delta p & 0 < (r - \bar{a}t) \le r_0\\ 0 & (r - \bar{a}t) < \xi\end{cases}\end{aligned} \tag{5.52}$$

In Figure 5.3 this result is compared with the corresponding result for the rightward traveling wave generated by an initially pressurized region at the origin. The spherical wave propagating outward consists of a triangular compressive wave followed immediately by a triangular rarefaction wave. The rarefaction is generated by reflection at the origin of the compressive wave propagating inward from the initially pressurized region. That inward traveling wave is the counterpart of the leftward traveling wave not shown here, for the planar case. Upon reflection at the origin, the compressive wave becomes a rarefaction wave, as for the reflection of planar waves illustrated in Figure 5.2.

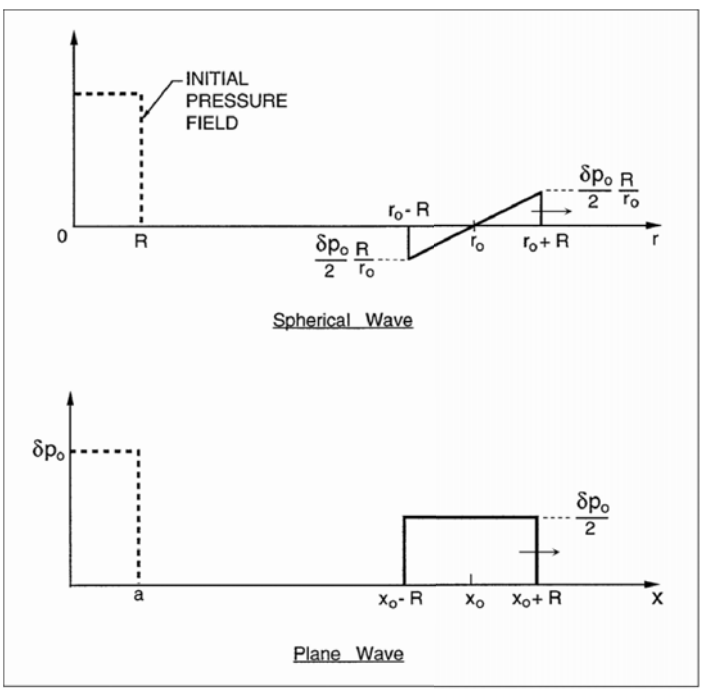

FIGURE 5.3. Comparison of spherical and planar waves produced by regions of increased pressure.

5.2.3. Cylindrical Waves. Cylindrical waves possess a special peculiarity: They always have a wake. The reason can be seen from Figure 5.4 showing the way in which spherical, planar and cylindrical waves are produced by point sources. The solid concentric circles represent wavefronts generated by sequences of infinitesimally short pulses. A single point source generates purely circular fronts in three-dimensions. An infinite flat sheet of uniformly and continuously distributed point sources emitting in phase produces planar waves.

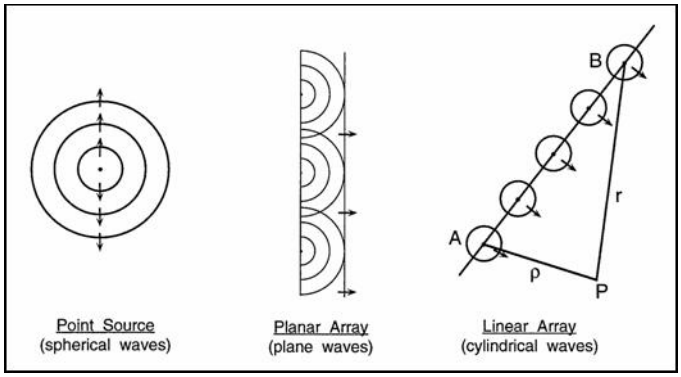

FIGURE 5.4. Generation of spherical, planar and cylindrical waves by point sources.

Cylindrical waves are generated by an infinite linear array of point sources. When an observation is made, the first disturbance observed is that emitted by the closest point on the line. But no matter where the observer is located, signals arrive at all times, the later signals arriving from sources further away in the line. The pressure at an observation point is computed by superposing the signals from the entire linear array:

$$p'(\rho;t) = \int_{-\infty}^{\infty} \frac{G(\bar{a}t - r)}{r} dz \tag{5.53}$$

where ρ, r, and z are defined in the sketch. With $r^2 = \rho^2 + z^2$ and setting $\xi = \bar{a}t - r$, $d\xi = -dr$, the integral can be rewritten to give

$$p'(\rho,t) = 2\int_{-\infty}^{\infty} \frac{G(\xi)d\xi}{\sqrt{(\xi - \bar{a}t)^2 + \rho^2}} \tag{5.54}$$

For large t,

$$p'(\rho, t \to \infty) \to \frac{1}{\bar{a}t} \int_{\xi_0}^{\xi_0 - \bar{a}t} G(\xi)d\xi \qquad (\xi_0 < \xi < \xi_0 + \delta\xi) \tag{5.55}$$

Hence the observed signal for a cylindrical wave can never be discrete: there is always a 'wake'. Morse and Feshbach (1952) and Morse and Ingard (1968) give extended discussions, including solutions to the wave equation for cylindrical waves.

5.3. An Estimate of the Influence of Internal Heat Conduction on the Propagation of Acoustic Waves

Acoustic waves impress gradients of velocity and temperature on the medium, therefore inducing viscous stresses and heat conduction. Those processes necessarily cause dissipation of mechanical energy, the waves

decay in space and time, and the entropy of the medium increases. However, for many purposes and over broad ranges of conditions we may neglect those dissipative influences. The purpose of this section is to discuss one simple way to estimate the effects of heat conduction on steady sinusoidal waves. The effects of internal viscous stresses may be treated in similar fashion.

With Fick's law for heat conduction, the linearized term $\nabla \cdot \mathbf{q}'$ in (5.3) is

$$\nabla \cdot \mathbf{q}' = \nabla \cdot (-\lambda \nabla T')$$

For one-dimensional motions along the x-axis, and constant coefficient of heat conduction, λ_c, we have

$$\nabla \cdot \mathbf{q}' = -\lambda_c \frac{\partial^2 T'}{\partial x^2} \tag{5.56}$$

The linearized form of the energy equation 3.41 is therefore

$$\bar{\rho} C_v \frac{\partial T'}{\partial t} + \bar{p} \frac{\partial u'}{\partial x} = \lambda_c \frac{\partial^2 u'}{\partial t^2} \tag{5.57}$$

With $\mathcal{W}'$, $\boldsymbol{\mathcal{F}}' = 0$ and in dimensional form, the acoustic continuity and momentum equations (3.40) and (3.41) for one-dimensional motions in a source-free medium at rest are:

$$\begin{aligned} \frac{\partial \rho'}{\partial t} + \bar{\rho} \frac{\partial u'}{\partial x} &= 0 \\ \bar{\rho} \frac{\partial u'}{\partial t} + \frac{\partial p'}{\partial x} &= 0 \end{aligned} \tag{5.58)a,b}$$

Substitute (5.58) in (5.57) to give

$$\bar{\rho} C_v \frac{\partial T'}{\partial t} - \lambda_c \frac{\partial^2 T'}{\partial x^2} - \frac{\bar{p}}{\bar{\rho}} \frac{\partial \rho'}{\partial x} = 0 \tag{5.59}$$

Because energy is dissipated, the motions are not isentropic so we cannot assume $p' \sim \rho'$. However we can eliminate the pressure as a dependent variable by taking it as a function of density and temperature, and writing

$$p' = \left(\frac{\partial p}{\partial \rho}\right)_T \rho' + \left(\frac{\partial p}{\partial T}\right)_\rho T' \tag{5.60}$$

Now combine (5.58)a with (5.60) to form a second equation in the density and temperature fluctuations:

$$\frac{\partial^2 \rho'}{\partial t^2} - \left(\frac{\partial p}{\partial \rho}\right)_T \frac{\partial^2 \rho'}{\partial x^2} - \left(\frac{\partial p}{\partial T}\right)_\rho \frac{\partial^2 T'}{\partial x^2} = 0 \tag{5.61}$$

To illustrate the point, it is simplest to consider the case of sinusoidal traveling waves, for which the fluctuations are[2]

$$\rho' = \hat{\rho} e^{i(kx - \omega t)} \ ; \quad T' = \hat{T} e^{i(kx - \omega t)} \tag{5.62}$$

and k is the wavenumber. In general, k and ω are complex quantities. Substitution in (5.59) and (5.61) gives the pair of simultaneous algebraic equations

$$\begin{aligned} \left[i\omega + \frac{\lambda_c}{\bar{\rho} C_v} k^2 \right] \hat{T} - i \left[\frac{\bar{p}}{\bar{\rho}^2 C_v} k^2 \right] \hat{\rho} &= 0 \\ \left[k^2 \left(\frac{\partial p}{\partial T}\right)_{\bar{\rho}} \right] \hat{T} - \left[\omega^2 - k^2 \left(\frac{\partial p}{\partial \rho}\right)_{\bar{T}} \right] \hat{\rho} &= 0 \end{aligned} \tag{5.63}$$

[2]We will consistently use $e^{-i\omega t}$ for harmonic time dependence. Thus sinusoidal wave traveling to the right, in the positive x-direction, will have the form $e^{i(kx-\omega t)}$, a function of $kx - \omega t = k(x - \bar{a}t)$, as suggested by (5.34).

Non-trivial solutions exist for $\hat{T}$ and $\hat{\rho}$ only if the determinant of coefficients vanishes, giving the dispersion relation

$$i\left\{k^2\left[\left(\frac{\partial p}{\partial \rho}\right)_{\bar{T}}+\frac{\bar{p}}{\bar{\rho}^2 C_v}\left(\frac{\partial p}{\partial T}\right)_{\bar{\rho}}\right]-\omega^2\right\}+\frac{\lambda_c}{\bar{\rho}C_v}\frac{k^2}{\omega}\left\{k^2\left(\frac{\partial p}{\partial \rho}\right)_{\bar{T}}-\omega^2\right\}=0 \tag{5.64}$$

To interpret this result, imagine that plane waves traveling according to (5.62) are generated by an oscillating boundary perpendicular to the x-axis, at $x = 0$. Therefore we take the frequency ω to be real and given. Solution to (5.64) will give the real and imaginary parts of k^2 and hence of k, say $k = k_r + ik_i$. Then the spatial part of the exponentials in (5.63) become

$$e^{ikx} = e^{ik_r x}e^{-k_i x}$$

Consequently, k_i^{-1} is the characteristic length for propagation in space: the amplitude of the traveling wave is reduced to $1/e$ of its initial value after traveling a distance $x = k_i$. Planes of constant phase travel with the speed of sound, the 'phase velocity' in this case, and the real part of k is related to the frequency and wavelength λ by:

$$k_r = \frac{\bar{a}}{\omega} = \frac{2\pi}{\lambda} \tag{5.65}$$

If heat conduction is ignored, $\lambda_c = 0$ and, because ω is real, so also is the wavenumber,

$$k = \omega\left[\left(\frac{\partial p}{\partial \rho}\right)_{\bar{T}}+\frac{\bar{p}}{\bar{\rho}^2 C_v}\left(\frac{\partial p}{\partial T}\right)_{\bar{\rho}}\right]^{-1/2} \tag{5.66}$$

Thus the waves travel with unchanging amplitude and wavelength.

Rather than examine the behavior when heat conduction is not ignored, let us determine the conditions under which its influence is negligibly small. We can estimate the conditions by requiring that the term representing heat conduction on the right-hand side of (5.57) should be much smaller than, say, the first term on the left-hand side:

$$\lambda_c\frac{\partial^2 \hat{T}'}{\partial x^2} \ll \bar{\rho}C_v\frac{\partial T'}{\partial t}$$

or, with (5.62),

$$\left|\lambda_c\left(-k^2\right)\hat{T}\right| \ll \left|\bar{\rho}C_v(i\omega)\hat{T}\right|$$

Hence we require

$$\left(\frac{\lambda_c}{\bar{\rho}C_v}\right)\frac{|k|^2}{\omega} \ll 1 \tag{5.67}$$

If this condition is satisfied, then the real part of (5.64) is negligibly small, holds, and the speed of sound is

$$\bar{a} = \frac{\omega}{k} = \left(\frac{\partial p}{\partial \rho}\right)_{\bar{T}}+\frac{\bar{p}}{\bar{\rho}^2 C_v}\left(\frac{\partial p}{\partial T}\right)_{\bar{\rho}} \qquad \left(\frac{\lambda_c}{\bar{\rho}C_v}\frac{|k|^2}{\omega} \to 0\right) \tag{5.68}$$

Thermodynamics for a two-state system gives the result

$$\left(\frac{\partial p}{\partial \rho}\right)_{\bar{s}} = \left(\frac{\partial p}{\partial \rho}\right)_{\bar{T}}+\left(\frac{\partial p}{\partial T}\right)_{\bar{\rho}}\left(\frac{\partial T}{\partial \rho}\right)_{\bar{s}} = \left(\frac{\partial p}{\partial \rho}\right)_{\bar{T}}+\frac{\bar{p}}{\bar{\rho}C_v}\left(\frac{\partial p}{\partial T}\right)_{\bar{\rho}}$$

so

$$\bar{a} = \sqrt{\left(\frac{\partial p}{\partial \rho}\right)_{\bar{s}}} = \sqrt{\gamma R\bar{T}}\left(\frac{\lambda_c}{\bar{\rho}C_v}\frac{|k|^2}{\omega} \to 0\right) \tag{5.69}$$

for negligible internal heat conduction and isentropic flow.

For the inverse limit when $\frac{\lambda_c}{\bar{\rho}C_v}\frac{|k|^2}{\omega}$ is indefinitely large, (5.64) gives

$$\bar{a} = \frac{\omega}{k} = \sqrt{\left(\frac{\partial p}{\partial \rho}\right)_{\bar{T}}} = \sqrt{\gamma R\bar{T}} \qquad \left(\frac{\bar{\rho}C_v}{\lambda_c}\frac{\omega}{|k|} \to 0\right) \tag{5.70}$$

for a perfect gas. This is the limit for infinitely fast internal heat conduction, so the process of sound propagation is isothermal.

To be specific, consider sound waves in air at ambient conditions:

$$\lambda_c = 0.73 \times 10^4 \quad \frac{\text{cal}}{\text{g}-^\circ\text{K}} \qquad \bar{a} = 3 \times 10^4 \quad \frac{\text{cm}}{\text{s}}$$

$$\bar{\rho} = 1.2 \times 10^{-2} \quad \frac{\text{g}}{\text{cm}^3} \qquad C_v = 0.17 \quad \frac{\text{cal}}{\text{g}-^\circ\text{K}}$$

Hence

$$\left(\frac{\lambda_c}{\bar{\rho}C_v}\right)\frac{|k|^2}{\omega} = \frac{\lambda_c}{\bar{\rho}C_v\bar{a}^2}\omega = 4 \times 10^{-10}\omega$$

which less than .01 for $\omega < 25 \times 10^6 s^{-1}$. This result confirms, and explains, the familiar fact that acoustic waves in the audio range 10–20,000 s^{-1} propagate isentropically under everyday circumstances. The influences of viscous stresses can be estimated in a similar manner.

This conclusion also holds for combustion chambers if the amplitudes of waves are not too large. It is a great simplification that we will ignore internal viscous stresses and heat conduction in practically all problems of combustion instabilities. However, if the waves grow to large amplitudes ('large' must be characterized in the particular problem at hand) then the losses—referred to as 'shock losses'—due to viscous stresses and heat conduction may not be negligible. For problems of combustion instabilities, those circumstances are more likely to arise in combustors having higher densities of energy release, notably liquid and solid rockets.

5.4. Energy and Intensity Associated with Acoustic Waves

In this section we establish definitions of energy density and the intensity—i.e. the flow of energy—for classical acoustic waves. The definitions are only approximate under the more complicated conditions existing in a combustor but the general ideas remain.

Following Landau and Lifschitz (1959) we return to the basic energy equation (5.9) for inviscid flow. The idea is to establish a connection between the rate of change of something (the energy) within a volume and the flow of something (the intensity) through the closed boundary of that volume. Integrate the energy equation over a volume fixed in space; and apply Gauss' theorem to the terms on the right-hand side:

$$\begin{aligned}\frac{\partial}{\partial t}\int \rho\left(e + \frac{u^2}{2}\right) dV &= -\int \nabla\cdot\left[\rho\mathbf{u}\left(e + \frac{u^2}{2}\right)\right] dV - \int \nabla\cdot(p\mathbf{u})\, dV \\ &= -\oiint \left(e + \frac{u^2}{2}\right)\rho\mathbf{u}\cdot d\mathbf{S} - \oiint p\mathbf{u}\cdot d\mathbf{S}\end{aligned}$$

This relation must be written to second order in the isentropic fluctuations; for example,

$$\begin{aligned}\rho e &= \bar{\rho}\bar{e} + \rho'\left[\frac{\partial}{\partial\rho}(\rho e)\right]_{\bar{\rho}} + \frac{1}{2}\rho'^2\left[\frac{\partial^2(\rho e)}{\partial\rho^2}\right]_{\bar{\rho}\bar{e}} + \ldots \\ &= \bar{\rho}\bar{e} + \rho'\bar{k} + \frac{1}{2}\frac{\rho'^2}{\bar{\rho}\bar{a}^2} + \ldots\end{aligned}$$

Eventually the result is

$$\frac{\partial}{\partial t}\int \varepsilon dV = -\oiint \varepsilon \mathbf{u}\cdot d\mathbf{S} - \oiint p'\mathbf{u}'\cdot d\mathbf{S} \tag{5.71}$$

where

$$\varepsilon = \frac{1}{2}\frac{p'^2}{\bar{\rho}\bar{a}^2} + \frac{1}{2}\bar{\rho}\mathbf{u}'^2 \tag{5.72}$$

is the *acoustic energy per unit volume* and $p'\mathbf{u}'$ is the *intensity*, the flux of acoustic energy through an area normal to the direction of propagation (energy/area-s).

The first term on the right-hand side of (5.71) is third order in the fluctuations and must be dropped. Hence we have the important result interpreted in Figure 5.5.

$$\frac{\partial \varepsilon}{\partial t} + \nabla\cdot(p'\mathbf{u}') = 0 \tag{5.73}$$

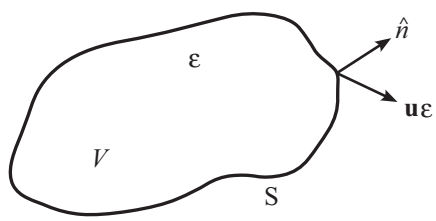

FIGURE 5.5. Acoustic energy and intensity.

Table 5.1 summarizes the basic properties of plane sinusoidal waves. Brackets $\langle\quad\rangle$ denote time averages over some interval τ; for any scalar function ψ, its time average is

$$\langle\psi\rangle = \frac{1}{\tau}\int_t^{t+\tau}\psi dt'$$

The dimensions of intensity are energy/sec.-area. Physical devices, such as piezoelectric microphones, can be built to measure intensity directly: the output, in volts, say, is proportional to the intensity of a wave incident upon the sensitive element. But the response of the human ear is not linear with intensity; the output (i.e., what one "hears") is more closely proportional to the logarithm of intensity. That is, what seems to be a doubling of "loudness" corresponds to a ten-fold increase of intensity. To avoid use of large numbers, it has therefore become the practice to use a logarithmic scale for expressing acoustic energies and intensities.

A sound wave is one decibel more intense if its intensity is increased by $\sqrt[10]{10}$. The difference of level for two sound waves, in decibels, is defined to be

$$\mathrm{dB} = 10\log_{10}\left(\frac{I_2}{I_1}\right) \qquad \text{(difference in level)} \tag{5.74}$$

It is conventional to choose as an absolute basis the intensity of a wave which is barely audible at 1000 Hz. The rms amplitude of such a wave is

$$\mathrm{dB} = 10\log_{10}\left(\frac{I}{I_0}\right) \qquad \text{(level)}$$

where

$$I_0 = \frac{(2 \times 10^{-4})^2}{\rho_0 a_0} \ .$$

Thus,

$$\mathrm{dB} = 20 \log \frac{p_{\mathrm{rms}}}{2 \times 10^{-4}} = 74 + 20 \log_{p_{\mathrm{rms}}} \tag{5.75}$$

With the numbers given above, the relation between dB and pressure is shown in Figure 5.6.

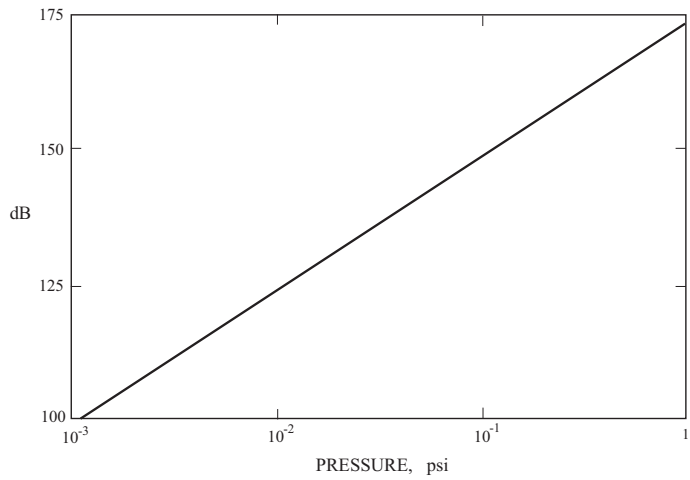

FIGURE 5.6. A graph of decibels versus pressure (lbs./in^2).

Finally it is interesting to see the frequency response for the human ear, sketched below.

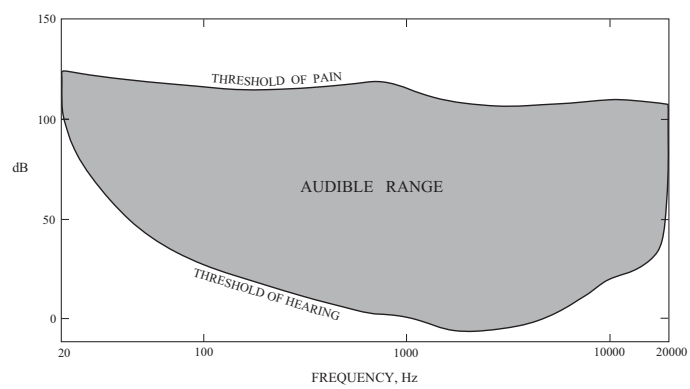

FIGURE 5.7. A graph showing the audible range of hearing for a typical human subject (adapted from Morse 1948).

Note that 1 dyne/cm^2 = 74 dB and one atmosphere is 10^6 dynes/cm^2. From these two figures it is clear that any steady wave which can be heard without pain has a sufficiently small amplitude that linearization of the equations of motion is reasonable.

TABLE 5.1. Results for Rightward and Leftward Traveling Sinusoidal Waves.

Wave to Right	**Wave to Left**
$p'_+ = \hat{p}_+ e^{-i(\omega t - kx)}$	$p'_- = \hat{p}_- e^{-i(\omega t + kx)}$
$u'_+ = \hat{p}_+ e^{-i(\omega t - kx)}$	$u'_- = \hat{u}_- e^{-i(\omega t + kx)}$
$\hat{u}_+ = \frac{\hat{p}_+}{\rho_0 a_0}$	$\hat{u}_- = -\frac{\hat{p}_-}{\rho_0 a_0}$
$\varepsilon_+ = \frac{p_+'^2}{\rho_0 a_0}$	$\varepsilon_- = \frac{p_-'^2}{\rho_0 a_0}$
$l_+ = p'_+ u'_+ = \frac{p_+'^2}{\rho_0 a_0}$	$l_- = p'_- u'_- = -\frac{p_-'^2}{\rho_0 a_0^2}$

$$\langle (\quad) \rangle = \frac{1}{\tau} \int_t^{t+\tau} (\quad) dt'$$

$\langle p_+'^2 \rangle = \frac{1}{2}\hat{p}_+^2$	$\langle p_-'^2 \rangle = \frac{1}{2}\hat{p}_-^2$
$\langle \varepsilon_+ \rangle = \frac{\hat{p}_+^2}{2\rho_0 a_0^2}$	$\langle \varepsilon_- \rangle = \frac{\hat{p}_-^2}{2\rho_0 a_0^2}$
$\langle l_+ \rangle = \frac{\hat{p}_+^2}{2\rho_0 a_0}$	$\langle l_- \rangle = \frac{p_-^2}{2\rho_0 a_0}$

More generally: $p' = \hat{p} e^{-i(\omega t + \varphi)}$; $\bar{u}' = \hat{\mathbf{u}} e^{-i(\omega t + \psi)}$

$$\langle \varepsilon \rangle = \frac{1}{4}\left[\frac{|\hat{p}|^2}{\rho_0 a_0^2} + \rho_0 |\hat{u}|^2\right] = \frac{1}{4}(p' p'^* + \rho_0 \mathbf{u}' \cdot \mathbf{u}'^*)$$

$$\langle l \rangle = \frac{1}{2}|\hat{p}||\hat{\mathbf{u}}| \cos(\varphi + \psi) = \frac{1}{4}(p'^* \mathbf{u}' + p' \mathbf{u}'^*)$$

where $(\quad)^*$ denotes complex conjugate.

5.5. The Growth or Decay Constant

In practice, due to natural dissipative processes, freely propagating waves and oscillations in a chamber will decay in space and time if there is no external source or energy. If there is an internal source of energy, waves may be unstable, having amplitudes increasing in time. The basic measure of the growth or decay of waves is the constant appearing in the exponent describing the sinusoidal spatial and temporal dependence of small amplitude waves, the definitions (5.62). For 'standing' or 'stationary' waves in a chamber, the wavelength, and hence wavenumber, is real and constant, but the frequency is complex:

$$\omega \to \omega + i\alpha \tag{5.76}$$

and the variables of the motion have the behavior in time

$$e^{-i(\omega + i\alpha)t} \equiv e^{-i\omega t} e^{\alpha t} \tag{5.77}$$

For the definition (5.76), $\alpha < 0$ means that the waves decay.

Normally in practice, $\left|\frac{\alpha}{\omega}\right| \ll 1$, implying that the fractional change of amplitude is small in one cycle of the oscillation. Thus when time averaging is carried out over one or a few cycles, $e^{\alpha t}$ may be taken as constant, and the average energy density computed with (5.72) and (5.73), is

$$\langle\varepsilon\rangle = e^{2\alpha t}\frac{1}{4}\left[\frac{|\hat{p}|^2}{\bar{\rho}\bar{a}^2} + \bar{\rho}|\hat{u}|^2\right] \tag{5.78}$$

Hence we have the important interpretations which serve as the basis for measuring values of α:

$$\begin{aligned} \alpha &= \frac{1}{|\hat{p}|}\frac{d|\hat{p}|}{dt} \\ \alpha &= \frac{1}{2\langle\varepsilon\rangle}\frac{d\langle\varepsilon\rangle}{dt} \end{aligned} \tag{5.79)a,b}$$

The sign of α is a matter of definition and has no fundamental significance. Thus, if the time dependence is taken to be $e^{i(\omega+i\alpha)t}$ then $\alpha < 0$ means that waves are amplified.

The formulas (5.79)a,b define local values of the growth constant. It is often more meaningful to know the value for the entire volume of the system in question, found by using $\int\langle\varepsilon\rangle dV$ rather than $\langle\varepsilon\rangle$:

$$\alpha = \frac{1}{2\int\langle\varepsilon\rangle dV}\frac{d}{dt}\int\langle\varepsilon\rangle dV \tag{5.80}$$

5.6. Boundary Conditions: Reflections from a Surface

In the absence of other sources, the linearized boundary condition on the pressure at a surface is the first term of (5.1), here in dimensional form:

$$\hat{\mathbf{n}}\cdot\nabla p' = -\bar{\rho}\frac{\partial\mathbf{u}'}{\partial t}\cdot\hat{\mathbf{n}} \tag{5.81}$$

The acoustic surface impedance z_a is defined by

$$\mathbf{u}'\cdot\hat{\mathbf{n}} = \frac{1}{z_a}p' \tag{5.82}$$

and the acoustic surface admittance y_a is the reciprocal of the admittance:

$$y_a = \frac{1}{z_a} \tag{5.83}$$

Then for harmonic motions, $p' = \hat{p}e^{-i\omega t}$, we can rewrite (5.81) as

$$\hat{\mathbf{n}}\cdot\nabla p' = -i\frac{\bar{\rho}\omega}{z_a}p' = -i\bar{\rho}\omega y_a p' \tag{5.84}$$

The units of impedance are (pressure/velocity) $\equiv$ (density $\times$ velocity). Hence for the medium, the product $\bar{\rho}\bar{a}$ is called the characteristic impedance, having value 42 g/cm^2-s. for air at standard conditions. Dimensionless forms are defined as:

$$\begin{aligned} &\text{acoustic impedance ratio:} \qquad \zeta_a = \frac{z_a}{\bar{\rho}\bar{a}} \\ &\text{acoustic admittance ratio:} \qquad \eta_a = \frac{1}{\zeta_a} \end{aligned} \tag{5.85}$$

In general, impedance functions are complex; the real and imaginary parts are called:

$$\begin{aligned} Re(z_a): &\quad \text{acoustic resistance} \\ Im(z_a): &\quad \text{acoustic reactance} \end{aligned} \tag{5.86}$$

From (5.82) and (5.83), the surface admittance is

$$y_a = \frac{\mathbf{u}' \cdot \hat{\mathbf{n}}}{p'}$$

and the dimensionless surface admittance ratio is

$$\eta_a = \bar{\rho}\bar{a} y_a = \frac{\bar{\rho}\bar{a}^2}{\bar{p}} \frac{\mathbf{M}' \cdot \hat{\mathbf{n}}}{p'/\bar{p}} = \gamma \frac{M_n'}{p'/\bar{p}} \tag{5.87}$$

where M_n' is the fluctuation of the Mach number normal to the surface.

If the surface is impermeable, the velocity at the surface is the velocity of the surface itself. However, if the surface is permeable, or, as for a burning propellant, mass departs the surface, then the impedance and admittance functions are defined in terms of the local velocity fluctuations presented[3] to the acoustic field, no matter what their origin.

Quite generally then, the admittance function represents the physical response of processes at the surface. It is of course an assumption that in response to an impressed pressure fluctuation, the fluctuation of velocity normal to the surface is proportional to the pressure change. Alternative definitions of quantities representing the acoustic boundary condition at a surface will arise when we consider special situations.

5.6.1. Reflections of Plane Waves at a Surface. Confinement of waves in a chamber to form modes necessarily involves reflections at the boundary surfaces. In solid propellant rockets the processes causing reflection are complicated, being responsible not only for confining the waves but also are the dominant means for transferring energy to the oscillating field in the chamber. Even at inert surfaces, more than the simple process of reflection is involved. Viscous stresses and heat conduction in the region adjacent to a surface cause dissipation of energy, discussed in Section 5.9.

Here we assume that all activity at the surface can be represented by a complex impedance or admittance function. The calculation follows that discussed by Morse and Ingard (1968). We consider reflection of a planar wave, Figure 5.8, allowing for the possibility of unequal angles of incidence and reflection; for simplicity we assume that there is no transmitted wave. The incident wave travels in the direction defined by the unit vector $\hat{\mathbf{k}}_i$ and the wavenumber vector is

$$\mathbf{k} = \frac{2\pi}{\lambda}\hat{\mathbf{k}} \tag{5.88}$$

We can represent the acoustic pressure and velocity in this plane wave by

$$\begin{aligned} p'(\mathbf{r};t) &= g_i(\mathbf{k}_i \cdot \mathbf{r} - \omega t) \\ \mathbf{u}'(\mathbf{r};t) &= \frac{\hat{k}_r}{\bar{\rho}\bar{a}} g_i(\mathbf{k}_i \cdot \mathbf{r} - \omega t) \end{aligned} \tag{5.89)a,b}$$

Similar formulas hold for the reflected wave with $\mathbf{k}_i$ replaced by $\mathbf{k}_r$ lying in the direction defined by the unit vector $\hat{\mathbf{k}}_r$. The representations are therefore those shown in Table 5.2

Because the frequency is the same for the incident and reflected waves, so are the magnitude of the wavenumber:

$$|\mathbf{k}_i| = \frac{\omega}{\bar{a}} = |\mathbf{k}_r| = k \tag{5.90}$$

[3]For burning propellants, care must be taken with definition of the surface at which the boundary condition is imposed. Usually the velocity at the 'edge' of the combustion zone in the gas phase is the most convenient choice. Thus the admittance presented to the acoustic field is not precisely that at the burning surface itself.

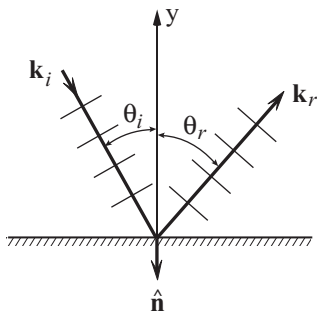

FIGURE 5.8. Reflection of a plane wave.

TABLE 5.2. Some Formulas for Incident and Reflected Plane Waves.

Incident Wave			**Reflected Wave**		
p'_i	$=$	$g_i(\xi_i)$	p'_r	$=$	$g_r(\xi_r)$
$\mathbf{u}'_i$	$=$	$\hat{\mathbf{k}}_i \frac{1}{\bar{\rho}\bar{a}} g_i(\xi_i)$	$\mathbf{u}'_r$	$=$	$\hat{\mathbf{k}}_r \frac{1}{\bar{\rho}\bar{a}} g_r(\xi_r)$
ξ_i	$=$	$\mathbf{k}_i \cdot \mathbf{r} - \omega t$	ξ_r	$=$	$\mathbf{k}_r \cdot \mathbf{r} - \omega t$
	$=$	$k(x \sin\theta_i - y\cos\theta_i) - \omega t$		$=$	$k(x\sin\theta_r - y\cos\theta_r) - \omega t$

Reflection is assumed to occur at $y = 0$. By definition of z_a, the surface impedance, with the normal velocity outward from the surface equal to $u'_y = \mathbf{u}' \cdot \hat{\mathbf{j}} = -\mathbf{u}' \cdot \hat{\mathbf{n}}$ where $\hat{\mathbf{n}}$ is the unit outward normal vector:

$$z_a = \left(\frac{p'}{u'_y}\right)_{y=0} = \bar{\rho}\bar{a}\frac{g_i(kx\sin\theta_i - \cot) + g_r(kx\sin\theta_r - \cot)}{\cos\theta_i g_i(kx\sin\theta_i - \cot) - \cos\theta_r g_r(kx\sin\theta_r - \cot)} \tag{5.91}$$

In general z_a is variable along the surface. Suppose that in fact z_a is constant, independent of x. That can be true if

$$\begin{aligned} \theta_i = \theta_r = \theta \\ g_r(\xi) = \beta g_i(\xi) \end{aligned} \tag{5.92}$$

Then (5.91) becomes

$$z_a \cos\theta = \bar{\rho}\bar{a}\frac{1+\beta}{1-\beta} \tag{5.93}$$

and the complex reflection coefficient β is related to the surface impedance by

$$\beta = \frac{z_a\cos\theta - \bar{\rho}\bar{a}}{z_a\cos\theta + \bar{\rho}\bar{a}} \tag{5.94}$$

This result is special because no transmitted wave has been accounted for. For example, if $z_a = \bar{\rho}\bar{a}$—perfect impedance matching exists at the interface—(5.93) gives $\beta = 0$ when $\theta = 0$, so there is no reflected wave. That is true in one sense because in physical terms $z_a = \bar{\rho}\bar{a}$ means that the same gas exists in both sides of the interface. Thus we are simply describing wave propagation in a continuous medium. On the other hand,

the physical picture treated here accommodates no transmitted wave, which means that when there is no reflection, processes must exist at the interface providing perfect absorption.

Now suppose $\theta \neq 0$ but $z_a = \bar{\rho}\bar{a}$. Then (5.93) gives β non-zero, i.e. partial absorption, and some of the incident wave is reflected.

5.7. Wave Propagation in Tubes; Normal Modes

The simplest form of combustor is a straight tube, having generally non-uniform cross section and not necessarily axisymmetric. Although the changes of cross section may be abrupt—even discontinuous—experience has shown that good results may be obtained by assuming that the velocity fluctuations are uniform at every section and parallel to the axis: the flow is treated as one-dimensional. The governing equations are given in Annex B, equations (B.2)–(B.4) with no sources:

Conservation of mass:
$$\frac{\partial \rho'}{\partial t} + \frac{1}{S_c}\frac{\partial}{\partial x}(\bar{\rho}u'S_c) = 0 \tag{5.95}$$

Conservation of momentum:
$$\bar{\rho}\frac{\partial u'}{\partial t} + \frac{\partial p'}{\partial x} = 0 \tag{5.96}$$

Conservation of energy:
$$\bar{\rho}C_v\frac{\partial T'}{\partial t} + \bar{p}\frac{1}{S_c}\frac{\partial}{\partial x}(u'S_c) = 0 \tag{5.97}$$

The wave equation for the pressure is:
$$\frac{1}{S_c}\frac{\partial}{\partial x}\left(S_c\frac{\partial p'}{\partial x}\right) - \frac{1}{\bar{a}^2}\frac{\partial^2 p'}{\partial t^2} = 0 \tag{5.98}$$

5.7.1. Waves in Closed Tubes.

(a) Normal Modes for a Tube Closed at Both Ends.

Results for a tube closed at both ends not only contain many ideas basic to general oscillations in chambers, but also are widely useful for practical applications. For a tube closed by rigid walls, the boundary conditions at the ends are that the velocity must vanish. The momentum equation (5.96) then states that acceleration and therefore the pressure gradient must vanish at the ends for all time:
$$\frac{\partial p'}{\partial x} = 0 \qquad (x = 0, L\ ; \quad \text{all } t) \tag{5.99}$$

General linear motions within the tube can be constructed as superpositions of *normal modes* defined in general by two properties:

i) sinusoidal variations in time

ii) the motion at any point bears always a fixed phase relative to that at any other point in the volume

Those conditions imply here that the pressure can be expressed as
$$p'(x;t) = \hat{p}(x)e^{-i\bar{a}kt} \tag{5.100}$$
where k is the complex wavenumber, related in general to the complex frequency by the formula
$$\bar{a}k = \omega + i\alpha \tag{5.101}$$

Because there are no dissipative processes in this problem, $\alpha = 0$ so the wavenumber is real. Substitution of (5.100) in (5.98) with S_c independent of x gives

$$\frac{d^2\hat{p}}{dx^2} + k^2\hat{p} = 0 \tag{5.102}$$

A solution to (5.102) satisfying (5.99) at $x = 0$ is $\hat{p} = A\cos kx$. To satisfy the condition at $x = L$, $\cos kL = 0$. Then k can assume only certain values k_l, called *characteristic* or *eigen* values:[4]

$$k_l = l\frac{\pi}{L} \qquad (l = 0, 1, 2, \cdots) \tag{5.103}$$

Corresponding to each k_l is a *characteristic function,* or *eigenfunction,*

$$\frac{\hat{p}_l}{\bar{p}} = A_l \cos(k_l x) \tag{5.104}$$

For the problems we treat in this book, the motions represented by the k_l, $\hat{p}_l$, and $\hat{u}_l$ are usually called *normal modes,* $\bar{a}k_l = \omega_l$ being the *normal* or *modal frequency,* and $\hat{p}_l$, $\hat{u}_l$ are the *mode shapes* of pressure and velocity. All of these terms are used for two- and three-dimensional motions as well.

A normal mode is characterized by its frequency and the spatial distributions, or 'shapes' of all dependent variables. The mode shape for the velocity is derived from the mode shape (5.104) by integrating the acoustic momentum equation (5.96) written for $\hat{u}_l$:

$$-i\bar{a}k_l\hat{u}_l = -\frac{1}{\bar{\rho}}\frac{d\hat{p}_l}{dx} = \frac{k_l}{\bar{\rho}}\bar{p}A_l \sin k_l x$$

Thus

$$\hat{u}_l = i\frac{\bar{p}}{\bar{\rho}\bar{a}}A_l \sin k_l x \tag{5.105}$$

or, written as the Mach number of the mode,

$$\hat{M}_l = i\frac{1}{\gamma}A_l \sin k_l x \tag{5.106}$$

(b) Normal Modes for a Tube Open at Both Ends.

In this case, the pressure is assumed fixed at the ends, for example because the tube is immersed in a large reservoir having constant pressure, and $p' = 0$. For isentropic motions, $\frac{\rho'}{\bar{\rho}} = \frac{1}{\gamma}\frac{p'}{\bar{p}}$ so $\rho' = \frac{1}{\bar{a}^2}p'$ and the continuity equation (5.95) is

$$\frac{\partial p'}{\partial t} + \frac{\bar{a}^2}{\bar{\rho}}\frac{\partial u'}{\partial x} = 0 \tag{5.107}$$

Hence if p' is fixed, the velocity gradient must vanish at the ends. Set $p' = Ae^{-i\bar{a}t}\sin kx$ and substitute in (5.107)

$$i\frac{\bar{a}}{\bar{p}}kAe^{-i\bar{a}kt}\sin kx = \frac{\bar{a}^2}{\bar{\rho}}\frac{\partial u'}{\partial x}$$

[4]Only for $l \geq 1$ do we find wave modes. For $l = 0$, a qualitatively different mode exists for which the pressure is uniform in the volume but pulsates at a frequency well below that for the fundamental wave mode. The velocity is practically zero and the oscillator is sustained by some sort of external action. A prosaic example is the low frequency sound one can create by blowing across the narrow opening at the neck of a bottle. In this case the mode is called the *Helmholtz mode* and the bottle is behaving as a *Helmholtz resonator.* Corresponding very low frequency modes have been observed in both liquid and solid rockets.

The left-hand side vanishes (and hence $\partial u'/\partial x = 0$) at $x = 0$ for any k, but at $x = L$, we must have $\sin k_l L = 0$. Hence $k_l = (2l+1)\frac{\pi}{L}$ and the normal mode shape and frequency are

$$\frac{\hat{p}_l}{\bar{p}} = A_l \sin(k_l x) \quad ; \qquad k_l = l\frac{\pi}{L} \quad (l = 1, 2, \cdots) \tag{5.108}$$

and the mode shape for the velocity is

$$\frac{\hat{u}_l}{\bar{a}} = \hat{M}_l = i\frac{1}{\gamma} A_l \cos k_l x \tag{5.109}$$

(c) Normal Modes for a Tube Closed at One End and Open at the Other.

Reasoning similar to the above leads in this case to the normal modes when the tube is closed at $x = 0$:

$$\frac{\hat{p}_l}{\bar{p}} = A_l \cos(k_l x) \quad ; \qquad \left(k_l = (2l+1)\frac{\pi}{2L}\right) \quad (l = 1, 2, \cdots)$$
$$\frac{\hat{u}_l}{a} = -i\frac{1}{\gamma} A_l \sin(k_l x)$$

5.7.2. Normal Modes for Tubes Having Discontinuities of Cross-Sectional Area. Combustors having discontinuous area distributions are commonly used in solid propellant rockets and in various laboratory devices. Consider the example sketched in Figure 5.9. The boundary conditions at the ends are:

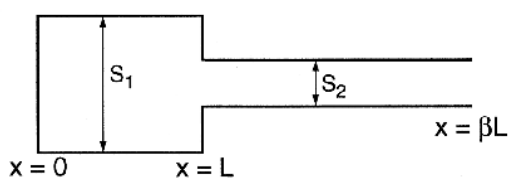

FIGURE 5.9. A uniform tube having a single discontinuity.

$$\begin{aligned} x = 0: &\qquad \frac{d\hat{p}}{dx} = 0 \\ x = \beta L: &\qquad \hat{p} = 0 \end{aligned} \tag{5.110)a,b}$$

Possible solutions in the regions to the left and right of the discontinuity are:

$$\begin{aligned} \frac{\hat{p}}{\bar{p}} &= A\cos kx \qquad (0 \le x \le L) \\ \frac{\hat{p}}{\bar{p}} &= B\sin k(\beta L - x) \qquad (L < x \le \beta L) \end{aligned} \tag{5.111)a,b}$$

Note that $k = \omega/\bar{a}$ is the same throughout the tube because the motion occurs everywhere at the same frequency.

Completing the problem comes down to determining the conditions for matching the solutions. Two are required:

i) **continuity of pressure:**

$$\lim_{\epsilon \to 0} [\hat{p}(L - \epsilon) - \hat{p}(L + \epsilon)] = 0$$

which gives

$$A \cos kL = B \sin(\beta - 1)kL \tag{5.112}$$

ii) **continuity of acoustic mass flow:**

Integrate the wave equation (for harmonic motions) across the discontinuity,

$$\int_{L-\epsilon}^{L+\epsilon} \left[\frac{d}{dx}(S_c \frac{d\hat{p}}{dx} + k^2 S_c \hat{p} \right] dx = 0$$

Because $\hat{p}$ is continuous, this relation becomes

$$\lim_{\epsilon \to 0} \left[\left(S_c \frac{d\hat{p}}{dx} \right)_{L+\epsilon} - \left(\frac{d\hat{p}}{dx} \right)_{L-\epsilon} \right] = 0$$

Thus, with $\bar{\rho}$ constant and $\frac{d\hat{p}}{dx} \sim \hat{u}$:

$$(\bar{\rho} S_c \hat{u})_{L+\epsilon} - (\bar{\rho} S_c \hat{u})_{L-\epsilon} \tag{5.113}$$

After substituting the waveforms (5.111)a,b, and using (5.112) we find the transcendental equation for the modal wavenumbers:

$$\frac{S_1}{S_2} \tan k_l L = \cot k_l (\beta - 1) L \tag{5.114}$$

This method of solving a problem with discontinuities is only approximate: a practical question is: how large are the errors? To gain some idea of the errors incurred, tests at ambient temperature ('cold flow tests') were carried out by Derr, Mathis and Brown (1974) for the geometry of a T-burner used for measuring the combustion response of burning solid propellants. Results are shown in Figure 5.10. The measured values of both the frequencies and the mode shapes are surprisingly well-predicted by this theory. The principal reason is that the influence of a discontinuity is confined to a relatively small region near the change of area, but the characteristics of the normal modes depend on the motion in the entire volume.

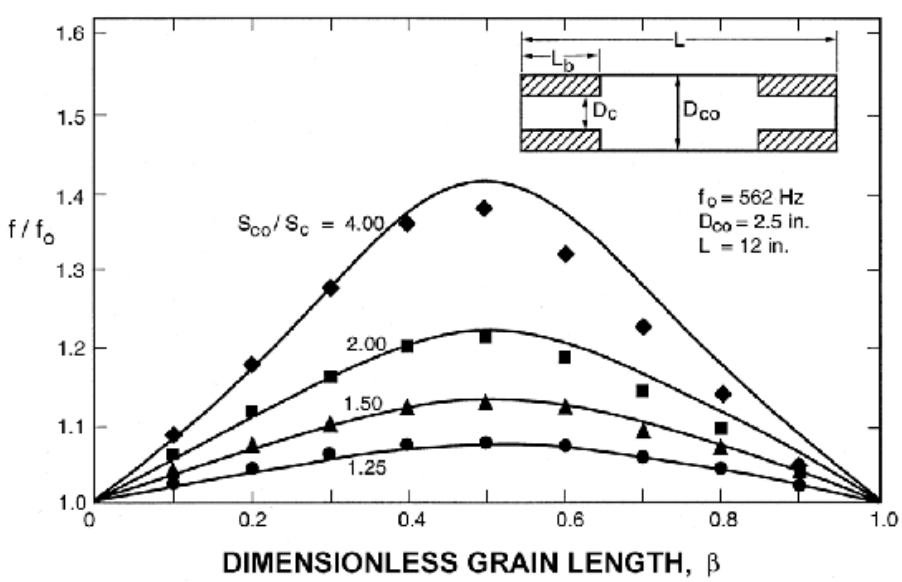

FIGURE 5.10. Comparison of experimental and theoretical results for normal frequencies in a T-burner at ambient temperature. (Derr, Mathis and Brown, 1974).

5.8. Normal Acoustic Modes and Frequencies for a Chamber

We now consider a volume of any shape enclosed by a rigid boundary and containing a uniform gas at rest. Unsteady small amplitude motions therefore satisfy the linear wave equation (5.4)a and its boundary condition (5.4)b requiring that the velocity normal to the boundary vanish at all times. By this definition given in Section 5.7.1, normal modes are solutions to this problem, which oscillate sinusoidally in time and have fixed phase relations throughout the volume. We assume the form[5] $p' = \psi e^{-i\bar{a}kt}$. The formal problem is to find ψ satisfying the scalar wave equation, also called the Helmholtz wave equation, with vanishing normal gradient at the surface:

$$\begin{aligned} \nabla^2\psi + k^2\psi &= 0 \\ \hat{\mathbf{n}} \cdot \nabla\psi &= 0 \end{aligned} \qquad (5.115)\text{a,b}$$

There are many well-written books covering this problem and its solution, for example Hildebrand (1952); Morse and Feshbach (1952); Morse and Ingard (1968); Matthews and Walker (1964); and Jeffries and Jeffries (1946). The simplest approach is based on the method of separation of variables, applicable for closed form solutions in thirteen coordinate systems; see, e.g., Morse and Feshbach (1952). In practical applications to combustors of these exact solutions, only rectangular and circular cylindrical chambers are important. Otherwise, apart from special cases such as that treated in Section 5.7.2, the normal modes and frequencies must be found by numerical methods.

5.8.1. Normal Modes for Rectangular Chambers. The wave equation in Cartesian coordinates is

$$\frac{\partial^2\psi}{\partial x^2} + \frac{\partial^2\psi}{\partial y^2} + \frac{\partial^2\psi}{\partial z^2} + k^2\psi = 0$$

and $\hat{n} \cdot \nabla\psi$ must vanish on the six flat surfaces each perpendicular to a coordinated axis, Figure 5.11. Applying the method of separation of variables leads to a solution having the form

$$\psi = A\cos(k_x x)\cos(k_y y)\cos(k_z z) \qquad (5.116)$$

and

$$k^2 = k_x^2 + k_y^2 + k_z^2 \qquad (5.117)$$

The boundary conditions must be satisfied:

$$\begin{aligned} \frac{\partial\psi}{\partial x} &= 0 \qquad \text{on} \qquad x = 0, L \\ \frac{\partial\psi}{\partial y} &= 0 \qquad \text{on} \qquad y = -\frac{a}{2}, \frac{a}{2} \\ \frac{\partial\psi}{\partial z} &= 0 \qquad \text{on} \qquad z = -\frac{b}{2}, \frac{b}{2} \end{aligned} \qquad (5.118)\text{a,b,c}$$

Reasoning similar to that given in Section 5.7.1 leads to the values of the wavenumbers

$$\begin{aligned} k_x &= l\frac{\pi}{L} \\ k_y &= m\frac{\pi}{b} \\ k_z &= n\frac{\pi}{c} \end{aligned} \qquad (5.119)\text{a,b,c}$$

[5]Consistent with the general character of this problem, we replace $\hat{p}$ by ψ, introducing a common notation for normal modes. The velocity potential Φ satisfies the same pair of equations (5.115)a,b, a result reflected by equation (5.31) which for sinusoidal motions means that p' and Φ are proportional: $p' = i\bar{a}k\bar{\rho}\Phi$.

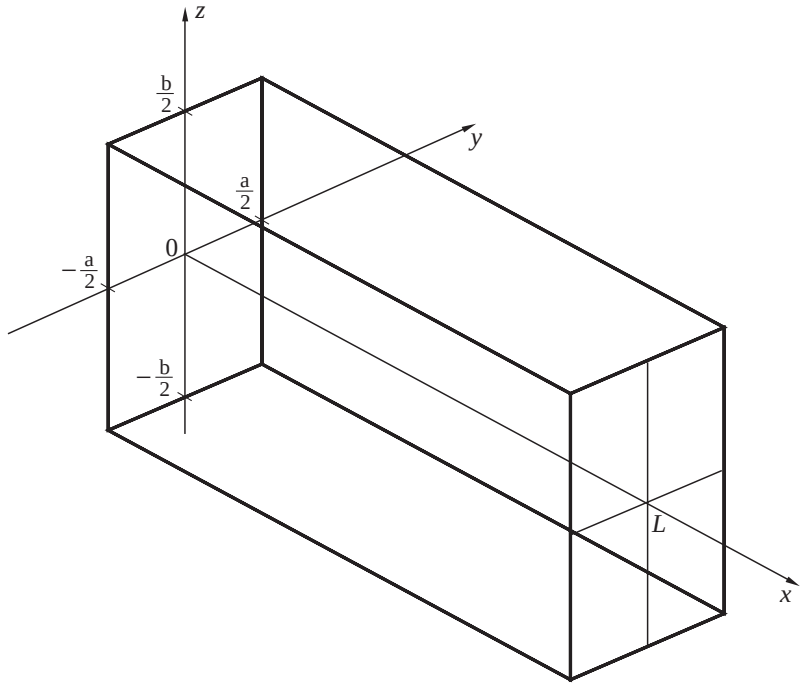

FIGURE 5.11. Rectangular chamber.

and the mode shapes are

$$\psi_{lmn} = A_{lmn} \cos\left(l\frac{\pi}{L}x\right) \cos m\frac{\pi}{a}\left(y + \frac{a}{2}\right) \cos n\frac{\pi}{b}\left(z + \frac{b}{2}\right) \tag{5.120}$$

The distributions of pressure therefore have the same form in all directions; of course the components (5.119)a,b,c of the wave number can assume any of the allowed values, and the frequency is given by (5.117), $\omega = \bar{a}k$.

5.8.2. Normal Modes for a Circular Cylindrical Chamber. Let x be the polar axis (Figure 5.12) and the wave equation in circular cylindrical coordinates is

$$\frac{1}{r}\frac{\partial}{\partial r}\left(r\frac{\partial\psi}{\partial r}\right) + \frac{1}{r^2}\frac{\partial^2\psi}{\partial\theta^2} + \frac{\partial^2\psi}{\partial x^2} + k^2\psi = 0 \tag{5.121}$$

The boundary condition requires that $\hat{\mathbf{n}} \cdot \nabla\psi$ vanish at the ends and on the lateral boundary:

$$\begin{aligned} \frac{\partial\psi}{\partial x} &= 0 \qquad & x = 0, L \\ \frac{\partial\psi}{\partial r} &= 0 \qquad & r = R \end{aligned} \tag{5.122}$$

Application of the method of separation of variables leads to a solution of the form

$$\psi(r, x, \theta; t) = A\begin{Bmatrix}\cos n\theta \\ \sin n\theta\end{Bmatrix} \cos k_l x J_m\left(\kappa_{mn}\frac{r}{R}\right) \tag{5.123}$$

To satisfy the boundary conditions, the values of k_l are integral multiples of π/L as above and the κ_{mn} are the roots of the derivative of the Bessel function:

$$\frac{dJ_m(\kappa_{mn})}{dr} = 0 \tag{5.124}$$

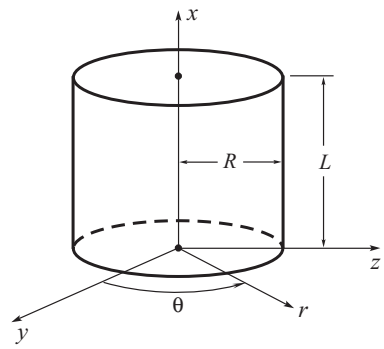

FIGURE 5.12. Circular cylindrical coordinates.

Figure 5.13 shows the lowest six modes in the transverse planes, and the identifying values of n and m. More extended results are given in standard texts and collections of special functions, for example Jahnke and Emde (1938).

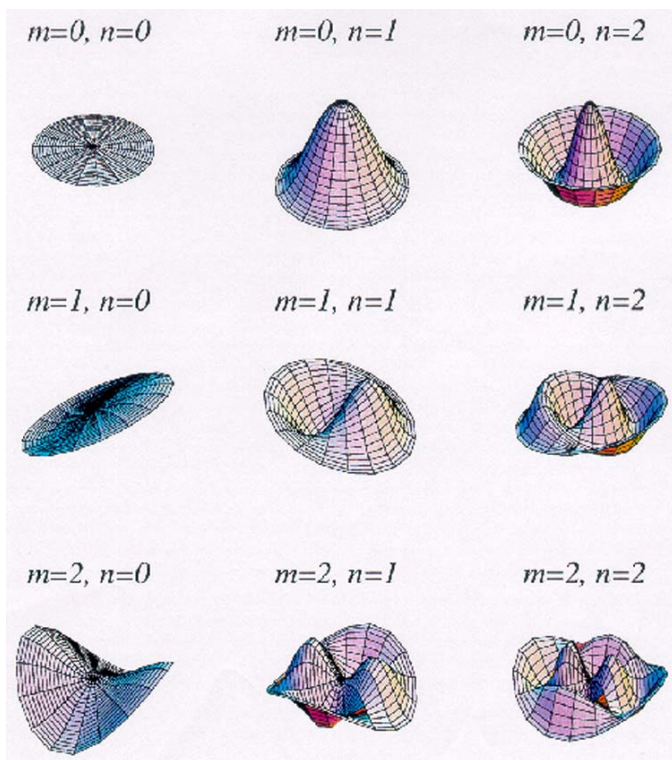

FIGURE 5.13. The first six transverse modes in a circular cylinder.

5.9. Viscous Losses at an Inert Surface

Dissipation of energy at inert surfaces is often a significant contribution to the losses of acoustic energy in a combustion chamber. The problem of computing the losses offers a particularly good opportunity to

illustrate different points of view. We will compute the losses in three different ways, all directly dependent on characteristics of the acoustic boundary layer. To simplify the analysis we assume that the average temperature is uniform throughout, having the value $\bar{T}_e$. Solutions for the velocity and temperature distributions within the acoustic boundary layer are derived in Annex C, equations (C.14)a,b with the time dependence included:

$$\begin{aligned} u'(x,y;t) &= \hat{u}_e(x)\left[1-e^{-\lambda y}\right]e^{-i\omega t} \\ T'(x,y;t) &= \hat{T}_e(x)\left[1-e^{-\lambda\sqrt{Pr}y}\right]e^{-i\omega t} \end{aligned} \tag{5.125)a,b}$$

Note that the local values of the velocity and temperature impressed on the layer are shown explicitly to be functions of position along the surface. The idea is that the solution for the boundary layer flow applies locally, but variations are induced along the surface by the distributions of velocity $\hat{u}_e(x)$ and temperature $\hat{T}_e(x)$ in the external flow. The simplest example is a cylindrical tube closed at both ends, Figure 5.14. Shaded regions indicate the acoustic boundary layers.

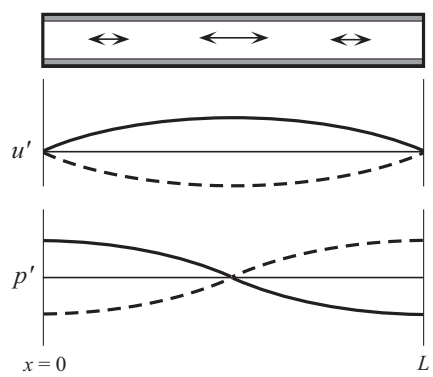

FIGURE 5.14. Acoustic velocity and temperature distributions for the fundamental mode in a closed tube.

5.9.1. Dissipation of Energy Within the Acoustic Boundary Layer. The theory of the acoustic boundary layer predicts a result, confirmed by experimental observations, that the influences of viscous stresses are confined to a thin layer having thickness δ. That is, $\delta/R_t \ll 1$ in the range of audio frequencies and for tubes having radius R_t greater than a centimeter or so. With the formula (C.6), the ambient properties of air given after equation (5.70), and $Pr = C_p\mu/\lambda_c = 0.73$ for air

$$\frac{\delta}{R_t} = \frac{1}{R_t}\sqrt{\frac{2v}{\omega}} = \frac{1}{R_t\sqrt{f}}\sqrt{\frac{v}{\pi}} \approx \frac{2}{R_t\sqrt{f}} \tag{5.126}$$

If $f = 9Hz$, $\delta/R_t \sim .06/R_t$, where R_t is in centimeters, and the assertion is proved.

Consequently, we can treat the acoustic boundary layer on the lateral boundary of a circular cylinder as if it were locally on a flat surface and the results of Annex C apply directly. We find the total rate of energy dissipation in the tube by integrating the energy dissipation over the acoustic boundary layer, i.e. over $y > 0$. Because the layer is thin and the non-uniformities of the flow properties decay exponentially in y, we integrate over all y from zero to infinity. Application of the formula (C.19) for the rate of entropy

production in this flow gives[6] (per unit volume)

$$\frac{ds}{dt} = \frac{1}{\bar{T}_e}\left[\mu\left(\frac{d\hat{u}}{dy}\right)^2 + \frac{\lambda_c}{\bar{T}_e^2}\left(\frac{d\hat{T}}{dy}\right)^2\right]$$

Then the rate of energy dissipation per unit volume is

$$\frac{de}{dt} = -\bar{T}_e\frac{ds}{dt} = -\mu\left(\frac{d\hat{u}}{dy}\right)^2 + \frac{\lambda_c}{\bar{T}_e^2}\left(\frac{d\hat{T}}{dy}\right)^2 \tag{5.127}$$

where either the real or the imaginary parts of $\hat{u}$ and $\hat{T}$ must be used. The time-averaged energy dissipation per unit are of surface is therefore the time average of the integral of (5.127) over the entire acoustic boundary layer:

$$\frac{1}{2\pi}\int_0^{2\pi} dt \int_0^{\infty}\left[\mu\left(\frac{d\hat{u}}{dy}\right)^2 + \frac{\lambda_c}{\bar{T}_e^2}\left(\frac{d\hat{T}}{dy}\right)^2\right] dy \tag{5.128}$$

This formula gives

$$\begin{array}{r} \textit{time-averaged energy} \\ \textit{loss per unit surface area} \end{array} \qquad \langle\dot{e}\rangle = -\frac{1}{2\gamma\bar{p}}\frac{\sqrt{\omega\nu}}{2}\left[\left|\frac{\hat{u}_e}{\bar{a}}\right|_m^2 + \frac{\gamma-1}{\sqrt{Pr}}\left|\frac{\hat{p}}{\bar{p}}\right|_m^2\right] \tag{5.129}$$

where $|\quad|_m$ means the maximum value in the oscillation and $\nu = \mu/\bar{\rho}$ is the kinematic viscosity.

Suppose that a standing wave is sustained in a tube, like the one sketched in Figure 5.14, by a speaker or piston. If the source of waves is suddenly cut off, the amplitude of the standing wave system will decay exponentially in time according to the discussion in Section 5.5, the decay constant being given by the formula 5.80:

$$\alpha = \frac{1}{2\int\langle\varepsilon\rangle dV}\frac{d}{dt}\int\langle\varepsilon\rangle dV \tag{5.130}$$

and $\int\langle\varepsilon\rangle dV$ is the total time-averaged energy in the tube. Here energy losses at the ends are ignored and compute $\frac{d}{dt}\int\langle\varepsilon\rangle dV$ as the integral of $\langle\dot{e}\rangle$, the formula (5.129) over the lateral area of the tube with

$$\begin{aligned} \hat{p}_e &\equiv A_l\cos(k_l x) \\ \hat{u}_e &= \frac{A_l}{\bar{\rho}\bar{a}}\sin(k_l z) \\ \langle\varepsilon_l\rangle &= \frac{A_l^2}{4\bar{\rho}\bar{a}^2}(\pi R_t^2 L) \end{aligned} \tag{5.131)a,b,c}$$

The time-averaged total energy is computed with 5.78 and the total time-average rate of dissipation is

$$\frac{d}{dt}\int\langle\varepsilon\rangle dV = -\frac{1}{2\gamma\bar{p}}\sqrt{\frac{\omega\nu}{2}}\left[1+\frac{\gamma-1}{\sqrt{Pr}}\right]A_l^2(\pi R_t^2 L) \tag{5.132}$$

Hence we find

$$\alpha = -\frac{1}{R_t}\sqrt{\frac{\omega\nu}{2}}\left[1+\frac{\gamma-1}{\sqrt{Pr}}\right] \tag{5.133}$$

Early measurements by several groups, e.g. Henderson and Donnelly (1962), gave a result roughly 8–10% higher than that predicted by (5.133). That was a puzzling situation for about fifteen years. The analysis for laminar flow—i.e. for sufficiently low amplitudes of the motion—should, one has reason to expect, be

[6]For purposes of estimation, it is sufficiently accurate to take the value of ν for combustion products to be the same as air at standard conditions, $\nu \approx 0.2\ cm^2/s$, and to assume that the average temperature has everywhere its ambient value, $\bar{T}_e$.

more accurate than that. Yet the experiments seem to have been done carefully and with good precision. Eventually, however, it turned out that the experiments must be carried out with extreme care indeed. With superb work exemplifying how carefully measurements must be made to obtain accurate results for acoustic losses, Quinn, Colclough and Chandler (1976) determined α with an error of 0.069%(!) compared with (5.133).

This example has wide implications in the field of combustion instabilities. Experiments designed to confirm theoretical and analytical results must be carefully carried out with the greatest possible precision; also, uncertainties in the results should be reported, a practice too often ignored. That requirement is a direct consequence of the fact that acoustical motions, despite their 'loudness' to human ears, contain relatively small amounts of energy and therefore are sensitive to small changes in the system containing them.

5.9.2. Another Way of Computing the Decay Constant. The second method of computing the decay constant due to losses in the acoustic boundary layer is based on the method of spatial averaging. We begin with the dimensional forms of the linearized equations including viscous stresses and heat conduction, (5.1)–(5.3) but no external sources and mean flow and with the velocity zero at the boundary:

$$\begin{aligned} \nabla^2 p' - \frac{1}{\bar{a}^2}\frac{\partial^2 p'}{\partial t^2} &= \nabla\cdot\boldsymbol{\mathfrak{F}}' - \frac{1}{\bar{a}^2}\frac{\partial \mathcal{P}'}{\partial t} \\ \hat{\mathbf{n}}\cdot\nabla p' &= -\boldsymbol{\mathfrak{F}}'\cdot\hat{\mathbf{n}} \end{aligned} \tag{5.134)a,b}$$

and

$$\begin{aligned} \boldsymbol{\mathfrak{F}}' &= \nabla\cdot\overleftrightarrow{\boldsymbol{\tau}}_v' \\ \mathcal{P}' &= -\frac{R}{C_v}\nabla\cdot\mathbf{q}' \end{aligned}$$

For harmonic motions with complex wave number $k = (\omega + i\alpha)/\bar{a}$, (5.134)a,b are

$$\begin{aligned} \nabla^2\hat{p} + k^2\hat{p} &= \hat{h} \\ \hat{\mathbf{n}}\cdot\nabla\hat{p} &= -\hat{f} \end{aligned} \tag{5.135)a,b}$$

where

$$\begin{aligned} \hat{h} &= \nabla\cdot\hat{\boldsymbol{\mathfrak{F}}} - \frac{ik}{\bar{a}}\frac{R}{C_v}\nabla\cdot\hat{\mathbf{q}} \\ \hat{f} &= -\hat{\mathbf{n}}\cdot\hat{\boldsymbol{\mathfrak{F}}} \end{aligned} \tag{5.136)a,b}$$

The procedure described in Section 4.1 leads to the formula for the complex wavenumber for the nth mode,

$$k^2 = k_n^2 + \frac{1}{\int \psi_n^2 dV}\left\{\int \hat{h}\psi_n dV + \oiint \hat{f}\psi_n dS\right\} \tag{5.137}$$

where the volume integrals extend over the entire volume of the tube and the surface integral is computed only over the lateral boundary because losses at the end are ignored. For the viscous effects in the boundary layer,

$$\begin{aligned} \hat{\boldsymbol{\mathfrak{F}}} = \nabla\cdot\hat{\boldsymbol{\tau}}_v &= \left(\mu\frac{d^2\hat{u}_x}{dy^2}\right)\hat{\boldsymbol{\imath}} \\ \nabla\cdot\hat{\mathbf{q}} = \frac{d\hat{q}_y}{dy} &= -\lambda_c\frac{d^2\hat{T}}{dy^2} \end{aligned} \tag{5.138)a,b}$$

Substitution in the bracketed terms on the right-hand side of (5.137) with μ and λ_c constant gives:

$$\begin{aligned}\int \hat{h}\psi_n dV + \oiint \hat{f}\psi_n dS &\equiv \int \left(\nabla\cdot\hat{\boldsymbol{\mathfrak{F}}}\right)\psi_n dV - \frac{ik}{\bar{a}}\frac{R_t}{C_v}\int \left(\nabla\cdot\hat{\mathbf{q}}\right)\psi_n dV \\ &\quad - \oiint \left(\hat{\mathbf{n}}\cdot\hat{\boldsymbol{\mathfrak{F}}}\right)\psi_n dS \\ &= -\frac{ik}{\bar{a}}\frac{R_t}{C_v}\int \left(\nabla\cdot\hat{\mathbf{q}}\right)\psi_n dV - \int \hat{\boldsymbol{\mathfrak{F}}}\cdot\nabla\psi_n dV \\ &= -\frac{ik}{\bar{a}}\frac{R_t}{C_v}\lambda_c\int \frac{d^2\hat{T}}{dy^2}\psi_n dV - \mu\int \frac{d^2u_x}{dy^2}\frac{d\psi_n}{dx}dV\end{aligned} \tag{5.139}$$

Because the viscous effects are significant only near the wall we can take the incremental element of volume to be $dV = dydS$ and write the integrals for $\psi_n \equiv \psi_l(x)$ a purely longitudinal mode shape:

$$\int \frac{d^2\hat{T}}{dy^2}\psi_n dV \equiv \oiint \psi_l dS \int_0^\infty \frac{d^2\hat{T}}{dy^2}dy = \oiint \psi_l \left(\frac{d\hat{T}}{dy}\right)_0 dS$$

$$\int \frac{d^2\hat{u}}{dy^2}\frac{d\psi_l}{dx}dV \equiv \oiint \frac{d\psi_l}{dx}dS \int_0^y \frac{d^2\hat{u}}{dy^2}dy = -\oiint \frac{d\psi_l}{dx}\left(\frac{d\hat{u}}{dy}\right)_0 dS$$

The derivatives $d\hat{T}/dy$ and $d\hat{u}/dy$ are significant only within the thin acoustic boundary layer and become negligible at the outer edge, y/δ large. Now use the results (C.14)a,b to evaluate the derivatives at the surface:

$$\begin{aligned}\left(\frac{d\hat{T}}{dy}\right)_0 &= \lambda\sqrt{Pr}\hat{T}_e & \left(\frac{d\hat{u}}{dy}\right)_0 &= \lambda\hat{u}_e \\ &= \lambda\sqrt{Pr}\bar{T}\left(\frac{\gamma-1}{\gamma}\right)\frac{\hat{p}_e}{\bar{p}} & &= \lambda\frac{i}{\bar{\rho}\omega}\frac{d\bar{p}_e}{dx}\end{aligned}$$

Inserting these results in (5.139) gives

$$\begin{aligned}\int \hat{h}\psi_l dV + \oiint \hat{f}\psi_l dS &\equiv \left(\frac{ik}{\bar{a}}\frac{R}{C_v}\lambda_c\right)\left[\lambda\sqrt{Pr}\bar{T}\left(\frac{\gamma-1}{\gamma}\right)\oiint \psi_l\frac{\hat{p}_e}{\bar{p}}dS\right] \\ &\quad + \mu\left[\frac{i\lambda\bar{p}}{\bar{\rho}\omega}\oiint \frac{d}{dx}\left(\frac{\hat{p}_e}{\bar{p}}\right)\frac{d\psi_l}{dx}dS\right]\end{aligned} \tag{5.140}$$

where dS is the increment of the lateral surface, $dS = (2\pi R_t)dx$.

The mode shapes for the acoustic pressure in a closed-closed uniform tube is (5.104). As the wave decays, its shape is very little different from the normal mode shape at the same (or nearly) the frequency. Hence we can replace $\hat{p}_e$ by $\psi_l = \bar{p}_e A_l \cos k_l x$, and we have the two integrals

$$\begin{aligned}\oiint \frac{\hat{p}_e}{\bar{p}}\psi_l dS &= q_t A_l \int_0^L \cos^2(k_l x)dx = \pi R_t L A_l \\ \oiint \frac{d}{dx}\left(\frac{\hat{p}_e}{\bar{p}}\right)\frac{d\psi_l}{dx}dS &= q_t A_l k_l^2 \int_0^L \sin(k_l x)dx = \pi R_t L A_l\end{aligned} \tag{5.141)a,b}$$

In (5.140), the values of k and ω are nearly[7] those for the normal mode; replacing $k \to k_l$, $\omega \to \omega_l$ and substituting (D.14)a-d in (5.140), we eventually find

$$\int \hat{h}\psi_l dV + \oiint \hat{f}\psi_l dS = \frac{k_l \bar{p}}{\bar{a}^2}(1-i)\left(\frac{1}{2}q_t L A_l\right)\left(1+\frac{\gamma-1}{\sqrt{Pr}}\right) \tag{5.142}$$

With $\int \psi_l^2 dV = \frac{1}{2}(\pi R_t^2 L)$, (5.137) becomes

$$\begin{aligned} k^2 &= k_l^2 + \frac{1}{\bar{p}A_l \int \psi_l^2 dV}\left\{\int \hat{h}\psi_l dV + \oiint \hat{f}\psi_l dS\right\} \\ &= k_l^2 + \frac{1}{\frac{\bar{p}A_l}{2}(\pi R_t^2 L)}\left\{\frac{k_l\bar{p}}{\bar{a}^2}(1-i)\left(\pi R_t^2 L A_l\right)\sqrt{\frac{\nu\omega}{2}}\left(1+\frac{\gamma-1}{\sqrt{Pr}}\right)\right\} \\ &= k_l^2 + (1-i)\frac{k_l\bar{p}}{\bar{a}^2}\left(\frac{2}{R_t}\right)\sqrt{\frac{\nu\omega}{2}}\left(1+\frac{\gamma-1}{\sqrt{Pr}}\right) \end{aligned} \tag{5.143}$$

The left-hand side is

$$k^2 = \frac{1}{\bar{a}^2}(\omega + i\alpha)^2 = \left(\frac{\omega}{a}\right)^2 - i\left(\frac{2\alpha\omega}{\bar{a}}\right) - \left(\frac{\alpha}{\bar{a}}\right)^2$$

Because $\alpha \ll \omega$, (5.143) is approximately

$$\left(\frac{\omega}{a}\right)^2 - i\left(\frac{2\alpha\omega}{\bar{a}}\right) = k_l^2 + (1-i)\frac{k_l\bar{p}}{\bar{a}^2}\left(\frac{2}{R_t}\right)\sqrt{\frac{\nu\omega}{2}}\left(1+\frac{\gamma-1}{\sqrt{Pr}}\right)$$

of which the imaginary part is

$$\alpha = -\frac{1}{R_t}\sqrt{\frac{\nu\omega}{2}}\left(1+\frac{\gamma-1}{\sqrt{Pr}}\right) \tag{5.144}$$

which is exactly (5.133).

5.9.3. Still Another Way of Computing the Decay Constant. A third method for computing the decay constant is instructive for several reasons. First it is a good illustration of the usefulness and at least for the problem considered here, accuracy of the one-dimensional approximation. Second, it illustrates an important consequence of the conservation of mass that has other applications. And third, related to the second, the analysis answers a fundamental question about the problem at hand: how does it happen that dissipation of energy taking place in the thin acoustic boundary layer is communicated to the waves outside the boundary layer? That is, the wave fronts remain very nearly planar in transverse sections, yet the amplitude decays in time due to processes confined to the thin layer near the wall. If the wave fronts (loci of constant phase) did not remain planar, the frequency would change with time, behavior not observed.

We base the analysis on the equations for unsteady one-dimensional flow constructed in Annex B. For the problem at hand, we imagine striking a control surface at the edge of the acoustic boundary layer, represented by the dashed line in Figure 5.15. The unsteady flow field within the acoustic boundary layer, the shaded region, is given by the results found in Annex C, repeated above as equations (5.125)a,b. Within the volume outside the boundary layer, a steady planar acoustic field exists, sustained by the motion of one end, for example. The velocity of the piston face need not be large and we may approximate the acoustic field by a classical resonant mode. Thus in (5.125)a,b we set the frequency equal to ω_l and $\hat{\mathbf{u}}_e(v)$ is given by (5.105). As explained in Annex C, the flow within the boundary layer is reasonably taken to be incompressible and the equation for conservation of mass is

$$\frac{\partial \hat{u}_e}{\partial x} + \frac{\partial v_e}{\partial y} = 0 \tag{5.145}$$

[7]These characterizations 'not very different' and 'nearly' can be rendered more rigorous in the context of the procedure explained in Chapters 3 and 4. The point here is that including deviations of order $\bar{M}_r$ from k_l introduces corrections of order $\bar{M}_r^2$ which must be ignored for reasons explained in the places cited.

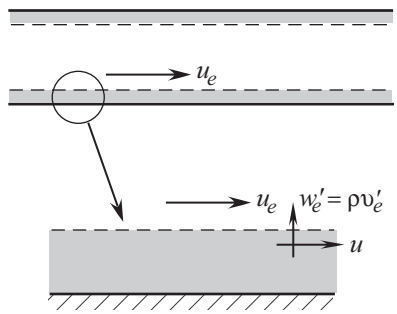

FIGURE 5.15. Definition of the lateral control surface.

Consequently, a velocity normal to the wall is induced within the acoustic boundary layer because the external velocity has non-zero gradient parallel to the wall. Chester (1964) has given the formula for v_e' for the linearized boundary layer theory used here:

$$v_e'(x,t) = \sqrt{\frac{\nu}{\pi}}\left(1 + \frac{\gamma - 1}{\sqrt{Pr}}\right)\int_0^\infty \frac{\partial}{\partial x} u_e'(x, t-\tau)\frac{d\tau}{\sqrt{\tau}} \tag{5.146}$$

For the standing acoustic wave, the lth acoustic mode, from (5.105) we have

$$\frac{\partial u_e'}{\partial x} = e^{-i\omega_l t}\frac{d\hat{u}_l}{dx} = i\bar{a}k_l\frac{A_l}{\gamma}\cos k_l x e^{-i\omega_l t} \tag{5.147}$$

Substitution in (5.146) leads to the formula for v_e':

$$\begin{aligned} v_e' &= i\frac{\omega_l}{\gamma}A_l\sqrt{\frac{\nu}{\pi}}\left(1 + \frac{\gamma-1}{\sqrt{Pr}}\right)\cos k_l x\int_0^\infty \frac{e^{-i\omega_l(t-\tau)}}{\sqrt{\tau}}d\tau \\ &= i\frac{\omega_l}{\gamma}A_l\sqrt{\frac{\nu}{\pi}}\left(1 + \frac{\gamma-1}{\sqrt{Pr}}\right)\cos k_l x\frac{e^{-i\omega_l t}}{\sqrt{\omega_l}}d\tau\int_0^\infty \frac{e^{-i\xi}}{\sqrt{\xi}}d\xi \\ &= \frac{(-1+i)}{\gamma}A_l\sqrt{\frac{\nu\omega_l}{2}}\left(1 + \frac{\gamma-1}{\sqrt{Pr}}\right)\cos k_l x e^{-i\omega_l t} = \hat{v}_e e^{-i\omega_l t} \end{aligned} \tag{5.148}$$

We will need the real part of the spatial dependence:

$$\hat{v}_e^{(r)} = -\frac{1}{\gamma}A_l\sqrt{\frac{\nu\omega_l}{2}}\left(1 + \frac{\gamma-1}{\sqrt{Pr}}\right)\cos k_l x \tag{5.149}$$

Now we focus attention on the acoustic field within the control surface shown in Figure 5.15. All influences of the boundary layer are contained in the velocity by v_e' representing oscillatory pumping of fluid through the surface. Hence we have a simple one-dimensional flow with distributed periodic sources of mass momentum and energy at the boundary. There is, of course, no net flow through the boundary, the time average of (5.148) being zero.

We begin with equations (B.3) and (B.5) written for constant cross-section area and no sources within the volume. The linearized forms are

$$\begin{aligned} \bar{\rho}\frac{\partial u'}{\partial t} + \frac{\partial p'}{\partial x} &= \mathcal{F}_{1s}' \\ \frac{\partial p'}{\partial t} + \gamma\bar{p}\frac{\partial u'}{\partial x} &= \mathcal{P}_{1s}' \end{aligned} \tag{5.150)a,b}$$

where $\mathcal{F}'_{1s}$ and $\mathcal{P}'_{1s}$ are given by (B.14) and (B.16). With mean velocity zero and pure gas, those definitions become

$$\begin{aligned} \mathcal{F}'_{1s} &= 0 \\ \mathcal{P}'_{1s} &= \frac{R}{C_v}\frac{1}{S_c}\left(\bar{h}_{0s} - \bar{e}_0 + C_v\bar{T}\right)\int (m_s^g)' dq \end{aligned} \tag{5.151)a,b}$$

The stagnation and ambient average temperatures are uniform and equal everywhere, so

$$\bar{h}_{0s} - \bar{e}_0 + C_v\bar{T} = (C_p - C_v + C_v)\bar{T} = C_p\bar{T} \tag{5.152}$$

With no average flow inward,

$$(m_s^q) = \bar{\rho}v'_e \tag{5.153}$$

where v'_e is given here by (5.148). Hence (5.151)b is

$$\mathcal{P}'_{1s} = \frac{\bar{a}^2}{S_c}\int \bar{\rho}v'_e dq \tag{5.154}$$

After combining (5.150)a,b in the usual way to form the wave equation, and substituting (5.152) and (5.154), we have

$$\frac{\partial^2 p'}{\partial x^2} - \frac{1}{\bar{a}^2}\frac{\partial^2 p'}{\partial t^2} = -\frac{1}{S_c}\frac{\partial}{\partial t}\int \bar{\rho}v'_e dq$$

For v'_e uniform on the perimeter of a transverse plane, the integral on the right-hand side becomes $\bar{\rho}v'_e(2\pi R_t)$ and the last equation is

$$\frac{\partial^2 p'}{\partial x^2} - \frac{1}{\bar{a}^2}\frac{\partial^2 p'}{\partial t^2} = -\frac{2}{R_t}\bar{\rho}\frac{\partial v_e}{\partial t} \tag{5.155}$$

Owing to the perturbation caused by the fluctuating mass flow at the boundary, the national modes of the chamber have frequencies ω slightly different from ω_l, the classical values. Set $p' \approx p'_l = \bar{\rho}A_l \cos k_l x$ and $v'_e = \hat{v}_e e^{-i\omega t}$ in (5.155), giving

$$\begin{aligned} \bar{p}A_l\cos(k_l x)(-k_l^2 + k^2) &= -\frac{2}{R_t}\bar{\rho}(-i\omega\hat{v}_e) \\ &\approx i\frac{2\omega_l\bar{\rho}}{R_t}\frac{(-1+i)}{\gamma}A_l\sqrt{\frac{\nu\omega_l}{2}}\left(1 + \frac{\gamma-1}{\sqrt{Pr}}\right)\cos k_l x \end{aligned}$$

Rearrangement leads to the formula for the complex wavenumber

$$k^2 = k_l^2 + (1-i)\frac{2\omega_l\bar{\rho}}{\bar{\rho}R_t\gamma}\sqrt{\frac{\nu\omega_l}{2}}\left(1 + \frac{\gamma-1}{\sqrt{Pr}}\right) \tag{5.156}$$

The real part again gives the formula (5.133).

5.9.4. First Order Correction to the Mode Shape. In the model analyzed here, the essential idea is that the influence of the acoustic boundary layer is exerted on the bulk flow by the motions induced normal to the wall. A force of interaction is generated tangential to the wall, having the proper phase to attenuate the waves in the tube. That process must alter the mode shape to a form consistent with the first order correction to the acoustic eigenvalue. One way to determine the distortion is to compute the first order correction to the zeroth order basis function by following the procedure described in Chapter 4. An alternative approach is based directly on the differential equation for the pressure subject to the boundary condition set by the radial 'pumping' velocity (5.149). The mass source term is the density times (5.149) and the boundary condition on the radial gradient of the pressure mode shape is

$$\hat{\mathbf{n}}\cdot\nabla\hat{p} = -i\omega\rho_0\hat{\mathbf{u}}\cdot\hat{\mathbf{n}} = i\omega\rho_0\hat{v} = i\omega\frac{R_c}{2}\hat{w} \tag{5.157}$$

where $\hat{v}$ is given by (5.149). After substitution for $\hat{v}$, this relation gives the explicit form

$$\frac{d\hat{p}}{dr} = (1-i)k^{3/2}\beta\hat{p} \tag{5.158}$$

where

$$\beta = \frac{1}{2}\sqrt{\frac{2\nu}{a_0}}\left[1 + \frac{\gamma - 1}{\sqrt{Pr}}\right] \tag{5.159}$$

For axisymmetric motions in a circular cylindrical tube, the scalar wave equation for the pressure is

$$\frac{1}{r}\frac{\partial}{\partial r}\left(r\frac{\partial\hat{p}}{\partial r}\right) + \frac{\partial^2\hat{p}}{\partial x^2} + k^2\hat{p} = 0 \tag{5.160}$$

with solution

$$\hat{p} = \sum^{n}\sum^{m} A_{nm}\cos k_n x J_0(\upsilon_m r) \tag{5.161}$$

where

$$\upsilon_m^2 = k^2 - k_n^2 \tag{5.162}$$

The boundary condition (5.160) sets the permissible values of υ_m and hence the wavenumber k:

$$\left[\frac{d}{dr}J_0(\upsilon_m r)\right]_{r=R_c} = (1-i)k^{3/2}\beta J_0(\upsilon_m R_c) \tag{5.163}$$

There are an infinite number of the υ_m, so that, for example, for the first longitudinal mode, the pressure field is

$$\hat{p} = \cos\left(\frac{\pi}{L}x\right)\sum_{m=1}^{\infty} A_m J_0(\upsilon_m r) \tag{5.164}$$

For simplicity here, only the first term will be treated; $\upsilon_m = \upsilon_1$ and in (5.163) the function $J_0(\upsilon_1 R_c)$ appears.

Now one expects that the corrections will be small, so k should not be very different from k_n, and the expansion can be used

$$J_0(\upsilon_1 r) \approx 1 - \frac{1}{4}(\upsilon_1 r)^2 \quad (\upsilon_1 \to 0) \tag{5.165}$$

Thus,

$$\left[\frac{d}{dr}J_0(\upsilon_1 r)\right]_{r=R_c} \approx -\frac{1}{2}\upsilon_1^2 R_c$$

and (5.163) is approximately

$$-\frac{1}{2}\upsilon_1^2 R_c = (1-i)k^{3/2}\beta\left[1 - \frac{1}{4}\left(\upsilon_1 R_c\right)^2\right]$$

If the second order term on the right-hand side is ignored, substitution of (5.162) gives

$$-\frac{1}{2}R_c(k^2 - k_1^2) = (1-i)k^{3/2}\beta$$

so

$$\upsilon_1^2 = (k^2 - k_1^2) \approx -\frac{2}{R_c}(1-i)k^{3/2}\beta \tag{5.166}$$

Again write $k = (\omega - i\alpha)/a_0$ with $\alpha \ll \omega$ on the left-hand side; because the second term on the right-hand side represents a small correction, set $k = \omega/a_0$. Equation (5.166) therefore gives approximately

$$\left(\frac{\omega}{a_0}\right)^2 - 2i\frac{\alpha\omega}{a_0^2} = \left(\frac{\omega_1}{a_0}\right)^2 - \frac{2}{R_c}(1-i)\left(\frac{\omega}{a_0}\right)^{3/2}\beta \tag{5.167}$$

from which the imaginary part is easily shown to be exactly 5.144 again.

But now the first term of (5.164), with (5.165) and (5.166), gives a formula for the distorted one-dimensional (planar) pressure field:

$$\hat{p} \approx \cos\frac{\pi x}{L} J_0(\upsilon_1 r) \approx \cos\frac{\pi x}{L}\left[1 - \frac{1}{4}(k^2 - k_1^2)r^2\right]$$

It is easy to show, using the definition (5.159) of β, that (5.166) is

$$(k^2 - k_1^2) = \frac{2\omega}{a_0^2}(1-i)\alpha_0 \tag{5.168}$$

where α_0 now stands for the attenuation coefficient (5.144) computed for purely one-dimensional waves, the real part of (5.167). Because $(1-i)^2 = -2i$, the distorted pressure field can be written

$$\hat{p} \approx \cos\frac{\pi x}{L}\left[1 + i\left(\frac{\omega\alpha_0}{a_0^2}\right)^2 r^2\right] \tag{5.169}$$

This pressure field is now to be used in the expression for $\hat{w} = 2\frac{\rho_0\hat{v}}{R_c}$, with $r = R_c$ (because the pressure in that formula is the pressure impressed on the boundary layer):

$$\hat{w} = -(1+i)\frac{2\alpha_0}{a_0^2}\cos\frac{\pi x}{L}\left[1 + i\left(\frac{\omega\alpha_0}{a_0^2}\right)^2 R_c^2\right] \tag{5.170}$$

Finally, use this new result for the source term in the solution for the wavenumber associated with the one-dimensional problem:

$$k^2 = k_1^2 - \frac{2\omega\alpha_0}{a_0^2}(1-i)\left[1 + i\left(\frac{\omega\alpha_0}{a_0^2}\right)^2 R_c^2\right] \tag{5.171}$$

The real and imaginary parts are

$$\left(\frac{\omega}{a_0}\right)^2 = \left(\frac{\omega_1}{a_0}\right)^2\left\{1 - (1+\zeta)\frac{2\alpha_0}{\omega}\right\} \tag{5.172}$$

$$\alpha = -(1-\zeta)\alpha_0 \tag{5.173}$$

where

$$\zeta = \left(\frac{\omega\alpha_0}{a_0^2}R_c^2\right)^2 \tag{5.174}$$

Thus, as anticipated, the distortion of the plane wavefronts produces a reduction in the value of the attenuation constant, which is in the right direction to give better agreement with experimental results. For $R_c = 5$ cm and $f = 500$ Hz,

$$\zeta = \left[\frac{(2\pi)(500)}{9\times 10^8}(25)\right]^2 \cong 7.8\times 10^{-9} a_0^2$$

and for $\alpha_0 = 20 sec^{-1}$, $\zeta \approx 30\times 10^{-7}$. The correction is therefore very small and cannot explain the discrepancy between the predicted and observed values. Although only the first term in the series (5.164) has been retained, it is unlikely that the last conclusion would be changed upon including further terms in the series.

The preceding calculation illustrates two points: it is an example of determining the effect of a boundary layer in its external driving flow, here a standing plane wave; and the result supports the idea that the zeroth order basic functions really are close approximations, over most of the chamber, to the actual mode

shapes. In this case, the small differences occur in a thin zone at the lateral boundary. The corrected mode shape calculated here satisfies the actual boundary condition to first order. However, the zeroth order mode shape *not* satisfying the correct boundary condition nevertheless yields the exact result for the first order eigenvalue (the decay constant) when used in the perturbation-iteration procedure constructed in Chapter 4.

5.10. Propagation of Higher Modes in Tubes; Cut-off Frequencies

In Section 5.7 we constructed the normal longitudinal modes for tubes of finite length. For the cases considered, the wavefronts are planar and the flow properties are always uniform over all transverse sections. The pressure, for example, at a chosen location undergoes a perfect sinusoidal oscillation in time, having maximum amplitude in time and bearing a fixed phase with respect to the pressure at any other location. Those properties define such a normal mode as a stationary or standing wave.

A stationary wave may be regarded as the superposition or synthesis of two traveling waves progressing in opposite directions. We may interpret that result in two ways: 1) the waves are confined to the tube and suffer reflection at the ends, suffering a 180 degree phase change up each reflection and reversing its direction of travel; or 2) two waves each infinitely long and traveling in opposite directions interfere destructively at the locations of the ends of the tube so as to maintain the correct boundary conditions. The second interpretation corresponds to the case for reflection of pulses worked out in Section 5.2.1 and illustrated in Figure 5.2.

Either of those two interpretations suggest a question regarding propagation of plane waves in a tube. What if, because of some sort of disturbance, the wave fronts are distorted? That is, suppose that the wave fronts, while still perfectly plane, suffer some distortion so that the distribution of the flow properties are not uniform in transverse sections. How then is propagation of that wave affected? Any such distortion can be synthesized of two-dimensional normal modes in transverse planes superposed on a traveling wave. Hence we assume the form for pressure wave traveling in the positive x-direction:

$$p'(x,y,z;t) = A\cos(k_y y)\cos(k_z z)e^{i(k_x x-\omega t)} \tag{5.175}$$

The frequency is unspecified, $\omega = \bar{a}k$. This wave must satisfy the wave equation

$$\frac{\partial^2 p'}{\partial x^2} + \frac{\partial^2 p'}{\partial y^2} + \frac{\partial^2 p'}{\partial z^2} - \frac{1}{\bar{a}^2}\frac{\partial^2 p'}{\partial t^2} = 0$$

Substitution of (5.175) produces the relation among the wavenumbers

$$-k_x^2 - k_y^2 - k_z^2 + k^2 = 0$$

and

$$k_x = \sqrt{k^2 - (k_y^2 + k_z^2)} \tag{5.176}$$

must be positive and real for propagation in the positive x-direction. The formulas (5.119)a,b,c give the two transverse wavenumbers and (5.175) is

$$k_x = \sqrt{\left(\frac{\omega}{\bar{a}}\right)^2 - \left[\left(\frac{m\pi}{b}\right)^2 + \left(\frac{n\pi}{b}\right)^2\right]} \tag{5.177}$$

Consequently, if k_x is to be real, the frequency of the wave must be larger than a critical value ω_c:

$$\omega > \omega_c \tag{5.178}$$

with

$$\omega_c = \bar{a}\sqrt{\left(\frac{m\pi}{b}\right)^2 + \left(\frac{n\pi}{b}\right)^2} \tag{5.179}$$

The frequency ω_c is called a "cutoff frequency" for the following reason. Substitute (5.176) in (5.144):

$$p' = \hat{p}(y,z)e^{i\left(\frac{1}{\bar{a}}\sqrt{\omega^2-\omega_c^2}x-\omega t\right)} \tag{5.180}$$

If $\omega < \omega_c$, the exponential factor can be written

$$e^{-\beta x}e^{i\omega t} \tag{5.181}$$

where the attenuation constant β is

$$\beta = \frac{1}{\bar{a}}\sqrt{\omega_c^2-\omega^2} \qquad (\omega < \omega_c) \tag{5.182}$$

Two main conclusions follow from this calculation:

i) If $m = n = 0$, the waves are purely planar longitudinal (or axial) and $\omega_c = 0$. That is, waves having any frequency will propagate freely, with no attenuation, and can form standing waves in a tube of finite length, closed or open.

ii) If $m, n \neq 0$, the cut off frequency is finite and only waves having frequency greater than the cut off frequency will propagate freely and under suitable conditions will form standing waves. Traveling waves having the transverse structure specified by the given values of m and n will decay exponentially in space, with attenuation constant β given by (5.150)a,b.

In practice, the existence of the phenomenon of 'cutoff' may arise if a chamber has slots or passages extending outward. Suppose that the chamber possesses a normal mode having relatively low frequency and a shape such that the amplitude of the pressure varies over the opening of the smaller passage. Then that mode tends to force generation of waves having spatial structure in the cross section of the passage. Therefore the cutoff frequency for oscillations in the passage is finite. If the frequency of the chamber mode is less than that cutoff frequency, the excited waves will have amplitude decaying with distance into the passage. Consequently, a pressure transducer placed at the far end of the passage will register a pressure amplitude much less than that existing in the chamber at that location. If data are obtained only with that transducer, then a misleading impression is obtained for the oscillating pressure in the main chamber. To interpret the data correctly, it is clearly necessary to understand well both the nature of the possible structure of the chamber modes and the phenomenon of cutoff frequency.

The decay of waves as they travel down a tube seems a strange result in view of the fact that no dissipative processes have been accounted for. Resolution of this paradoxical result can be reached by examining reflection and interference of waves traveling in directions not parallel to the axis of the tube. Off-axis propagation is associated with the non-uniform structure of the higher order modes and the reflections occur because of the boundary conditions set on the lateral surfaces. Morse and Ingard (1968) supply the details of this interpretation.

5.11. The Impedance Tube

Perhaps the simplest yet most widely useful acoustical instrument is the impedance tube, known for over one hundred years. Its true origin seems to have been lost. We follow Morse's analysis (Morse 1948), but the most efficient and effective method for obtaining data is probably that worked out by Baum (1980); the references must be consulted for thorough discussions.

Figure 5.16 shows the essential features of the basic impedance tube. At one end is mounted the test sample of which the impedance or admittance function is to be measured. The other end is fitted with a piston or equivalent apparatus (e.g. a loudspeaker) whose frequency can be controlled. Measurements are taken when the frequency is constant. The piston then causes ('radiates') waves having amplitude p_- to the

left. If there are no distributed losses along the tube or its walls, a wave has constant amplitude and phase between the piston and a thin region of transition at the face of the sample. In that thin region waves are generated and propagate both to the left and the right.

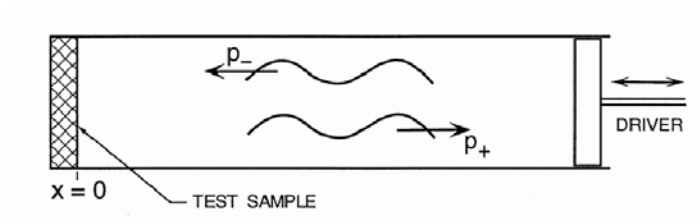

FIGURE 5.16. The basic impedance tube.

When the system has reached a steady state of oscillation, the region outside the transition zone contains a standing wave. The standing wave is the superposition of a wave $\hat{p}_-$ propagating to the left from the piston, and a wave $\hat{p}_+$ propagating to the right, the net result of reflections from the sample and the transition region. The phase and amplitude of the wave $\hat{p}_+$ are different from those of wave $\hat{p}_-$ due to the action of the test sample. We assume there is no mean flow, so with no distributed losses (or gains) of energy along the tube, the steady waves are represented by the two amplitudes of pressure and velocity:

$$\begin{aligned} \hat{p}_- &= Ae^{-ikx} \quad (a) & \hat{u}_- &= -\frac{A}{\rho_0 a_0}e^{-ikx} \quad (b) \\ \hat{p}_+ &= Be^{ikx} \quad (c) & \hat{u}_+ &= -\frac{B}{\rho_0 a_0}e^{ikx} \quad (d) \end{aligned} \tag{5.183)a–d}$$

where k is a real wavenumber.

The total pressure and velocity oscillations are

$$\begin{aligned} \hat{p} &= Ae^{-ikx} + Be^{ikx} = A\left[e^{-ikx} + \frac{B}{A}e^{ikx}\right] \\ \hat{u} &= -\frac{A}{\rho_0 a_0}e^{-ikx} + \frac{B}{\rho_0 a_0}e^{ikx} = -\frac{A}{\rho_0 a_0}\left[e^{-ikx} - \frac{B}{A}e^{ikx}\right] \end{aligned} \tag{5.184)a,b}$$

Define

$$\psi = \pi\alpha_0 + i\pi\beta_0 \tag{5.185}$$

and

$$B = -Ae^{2\psi} \tag{5.186}$$

so (5.184)a,b become

$$\begin{aligned} \hat{p} &= A\left[e^{-ikx} - e^{ikx+2\psi}\right] \\ \hat{u} &= -\frac{A}{\rho_0 a_0}\left[e^{-ikx} + e^{ikx+2\psi}\right] \end{aligned} \tag{5.187)a,b}$$

On the face of the test sample at $x = 0$, the impedance is

$$z = \left[\frac{\hat{p}}{-\hat{u}}\right]_{x=0} = \rho_0 a_0 \frac{1 - e^{2\psi}}{1 + e^{2\psi}} \tag{5.188}$$

Thus the phase ψ is related to the impedance by

$$e^{2\psi} = \frac{1 - z/\rho_0 a_0}{1 + z/\rho_0 a_0} \tag{5.189}$$

Values of ψ may be inferred from measurements of the envelope of the modal structure along the axis of the impedance tube; (5.187)a becomes

$$\hat{p}(x) = -Ae^{\psi}\left[e^{ikx+\psi} - e^{-ikx-\psi}\right] = -2Ae^{\psi}\sin k(\psi + ikx)$$

Write

$$\psi + ikx = \pi(\alpha + i\beta) \tag{5.190}$$

with

$$\alpha = \alpha_0 \quad \text{and} \quad \beta = \beta_0 + \frac{2x}{\lambda} \tag{5.191}$$

The magnitude of the pressure oscillation in the standing wave is

$$|\hat{p}| = 2A|e^{\psi}||\sin k\pi(\alpha + i\beta)| = 2Ae^{\pi\alpha}\sqrt{\cosh^2\pi\alpha - \cos^2\pi\beta} \tag{5.192}$$

Within this idealized picture of the pressure field, one needs only the maxima and minima of $|\hat{p}|$:

$$\begin{aligned} &\text{Maxima:} \quad |\hat{p}|_{max} = 2Ae^{\pi\alpha}\cosh\pi\alpha \quad @ \quad \beta_0 + 2\frac{x}{\lambda} = \pm\frac{1}{2}, \pm\frac{3}{2}, \cdots \\ &\text{Minima:} \quad |\hat{p}|_{min} = 2Ae^{\pi\alpha}\sqrt{\cosh\pi\alpha - 1} \quad @ \quad \beta_0 + 2\frac{x}{\lambda} = \pm 1, \pm 2, \ldots \end{aligned} \tag{5.193)a,b}$$

A sketch of $|\hat{p}|$ is given in Figure 5.17

The real part of ψ, $\alpha \equiv \alpha_0$, may be found from the ratio of the maxima and minima,

$$\frac{|\hat{p}|_{max}}{|\hat{p}|_{min}} = \coth\pi\alpha \tag{5.194}$$

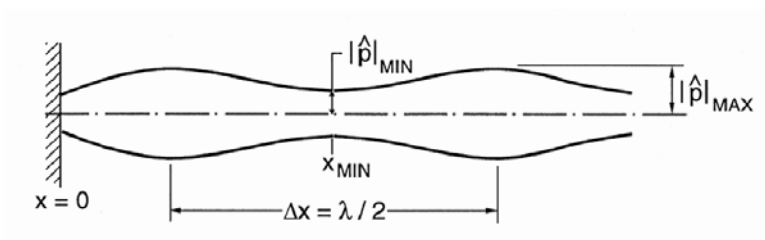

FIGURE 5.17. Sketch of $|\hat{p}|$ when distributed losses are ignored.

Values of β, and hence the imaginary part of ψ, are related to the locations of the maxima and minima. From (5.193)b, the first minimum occurs at $\beta_0 + \frac{2}{\lambda}x_{min} = 1$ which gives

$$\beta_0 = 1 - \frac{2}{\lambda}x_{min} \tag{5.195}$$

According to these results for the idealized impedance tube having no losses except at the test sample, only three measurements $(|\hat{p}|_{max}, |\hat{p}|_{min}, x_{min})$ are required to give ψ and hence the impedance at one frequency. In practice, use of the impedance tube is considerably more complicated. Even when the sample presents a well-defined surface to the acoustic field, the distributed losses cannot be ignored. Procedures for taking them into account are well-known in the field; the experimental methods required to handle them may become fairly involved. Baum (1980) has given a good discussion of the method he devised, perhaps the most effective available.[8]

The impedance tube remains the best apparatus for determining the impedance function of an inert surface. Efforts to adapt the method for measuring the impedance (or admittance) function of active surfaces

[8]This statement is based solely on the author's experience with his students, many years ago.

have not led to results useful for routine applications. The best example is probably Baum's effort to measure the admittance of a burning surface. Offering prospects of overcoming rather serious shortcomings of the T-burner and other devices prospects, the impedance tube posed its own problems which have not been overcome (Baum 1980). A short survey of applications of the impedance tube to measure the admittances of gaseous injectors has been given in the article by Brown, Culick and Zinn included in the collection edited by Boggs and Zinn (1978).