CHAPTER 8

Passive Control of Combustion Instabilities

Treating combustion instabilities in combustors for operational propulsion systems has always been and remains a matter of passive control. Methods of active control, which are discussed in Chapter 9, still (2005) remain largely in the realm of demonstrations although some recent work suggests that more basic problems and approaches are attracting attention. Quite generally, methods of passive control fall into two classes: modifications of the propellant supply system; and changes of the combustor geometry. Both kinds of control (in this context commonly referred to as 'fixes') have been used in all types of propulsion systems.

For solid rockets, two sorts of passive control are routinely applied: changes in the propellant composition; or modifications of the geometry of the propellant grain. It is rarely possible to alter the reactants in liquid fueled systems. Hence passive control in those cases has been exercised largely by adjusting the design of the fuel supply system; or by changing the combustor geometry, often with the addition of baffles, resonators, or acoustic liners. In any case, the basis for using passive control is mainly qualitative and empirical, founded on understanding the basic processes. The discussion in this chapter is descriptive, largely a brief survey of experiences. Wherever possible the physical reasons for successes are given. Our treatment is cursory because much of the material is covered well in easily accessible references.

Further effort has been devoted in the past decade to using computational methods to aid design of passive devices. The approach will clearly become more important as experience grows and the procedures improve. Nevertheless, testing remains the primary basis for developing practical means of passive control.

8.1. Interpretation of Passive Control

How passive control works in a general sense can be explained most simply by appealing to the basic ideas illustrated in Figures 1.1 and 1.9. The essential point is that a combustion system really consists of two dynamical systems: the chamber dynamics and the combustion dynamics. The combustion chamber acts as an amplifier of acoustical motions; the combustion processes provide feedback, giving the possibility for unstable oscillations. Instabilities will occur if the energy gained by unsteady motions in the chamber exceeds the energy lost during a cycle. Passive control consists in modifying or blocking at least one of the factors contributing to the existence of oscillations; or suitably increasing the damping in the system. Figure 8.1 combines the two parts of Figure 1.9 to show schematically the fact that a mode (here the second wave mode) of the chamber dynamics will become unstable if the rate of energy gains exceeds the rate of energy loss in the frequency range covering that mode. Thus there are clearly three possible tactics that may be followed to eliminate, or at least reduce, the instability: decrease the energy gains; increase the energy losses; or shift the frequency response of the chamber so all peaks lie outside the shaded range where the gains exceed the losses. The three possibilities are sketched in Figure 8.2 where the dashed lines indicate the behavior before modification, shown in Figure 8.1.

Note that for Figures 8.2(a) and (b) we assume that the losses are increased sufficiently (Part a) or the gains are reduced sufficiently (Part b) that the losses exceed the gains for all frequencies and the system is completely stable. In 8.2(c), the gains exceed the losses in the frequency range $f_1 < f < f_2$ so the chamber

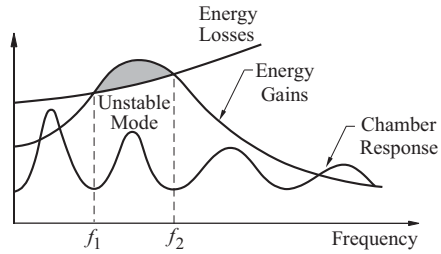

FIGURE 8.1. Schematic diagram showing qualitatively the conditions under which instabilities exist.

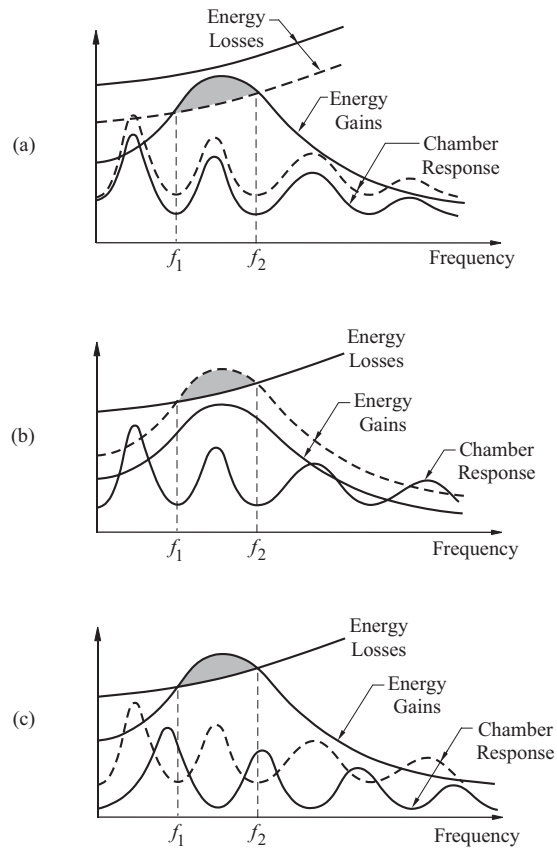

FIGURE 8.2. Qualitative and stylized interpretation of the possible effect of modifications on the dynamical behavior of a combustion system; dashed lines indicate behavior before modifications are made to reduce the tendency for instability. (a) energy losses increased, usually by a small change of the chamber response; (b) energy gains reduced; (c) modified chamber response. Dashed lines indicate conditions prior to modifications.

dynamics may exhibit oscillations. However, since no peak of the response lies in that range, the amplitude of any oscillation will be much reduced from its value existing with the unmodified chamber response. The point is that when purely changes of geometry are made, the system may still show instabilities: The details can be known (approximately) only by carrying out calculations using, for example, the analytical apparatus developed here in Chapters 3–7.

Corresponding to the behavior sketched in Figure 8.2, we can construct block diagrams, modified forms of Figure 1.1. This procedure makes the connection between the subject at hand and the field of feedback control. To illustrate the idea we assume linear behavior and adopt conventions familiar in the theory of feedback control, elaborated further in the following chapter. We assume that the governing equations have been transformed from the time domain to the complex frequency (s) domain by applying the Laplace transform. The various transfer functions are identified by the following symbols:

$G(s)$: chamber dynamics
$Q(s)$: combustion dynamics
$C_G(s)$: modification of the chamber dynamics
$C_Q(s)$: modification of the combustion dynamics

Then the complete linear dynamical system is represented by the diagram given in Figure 8.3, where F and P represent the Laplace transforms of the external input and pressure respectively.

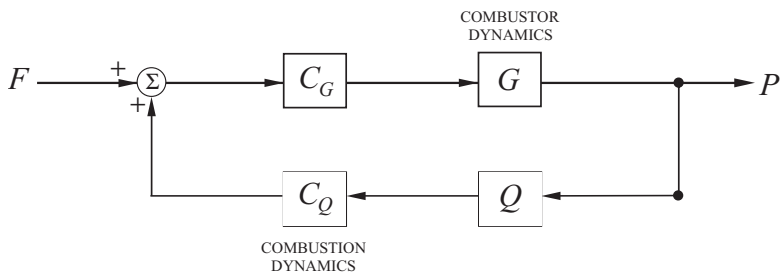

FIGURE 8.3. Block diagram of the basic system (G, Q) with passive control due to modifications of the chamber dynamics (C_G) and of the combustion dynamics (C_Q).

The transfer function for the system can be found directly by noting that the input to C is

$$F + QC_QP$$

and the output of G is therefore

$$GC_G(F + QC_QP)$$

But the output if G is P, so

$$P = GC_G(F + QC_QP)$$

and

$$P = \frac{(GC_G)}{1 - (GC_G)(QC_Q)}F \tag{8.1}$$

Thus the effective transfer functions of the chamber and combustion dynamics are GC_G and QC_Q.

An instability may be interpreted as a motion, i.e. a non-zero value of the pressure (P), that occurs when the external disturbance (F) is vanishingly small. That event arises if the denominator of (8.1) vanishes,

$$(GC_G)(QC_Q) = 1 \tag{8.2}$$

This equation (here the transfer functions are all assumed to be scalars) gives the values s_n of the complex frequency for which instabilities arise. Those values of s_n identify the peaks of the response function sketched in Figures 8.1 and 8.2.

Instabilities in the unmodified system are found for values of s_n given as the roots of (8.2) with $C_G = C_Q = 1$. Hence, if C_G or C_Q both differ from unity, here representing the effects of passive control, then the roots of (8.2) are shifted in the complex plane. The sketches in Figure 8.2 suggest the consequences of

C_G and C_Q differing from unity. As indicated in Figure 8.2(a), the energy losses tend to be related to the response of the chamber for liquid fueled systems. If, for example, viscous or acoustic radiation losses are increased, the peaked portions of the response broadens (the "Q" of each mode is decreased) and the peak values are reduced. Particularly if losses due to particulate matter are significant, as for solid rockets, the connection with the chamber response is relatively weak.

On the other hand, if the combustion processes are affected, for example, by small changes in the injection system of a liquid rocket, and the chamber dynamics are practically unaffected, then the conditions sketched in Figure 8.2(b) are met. It appears that this case arises when the dynamics of the injection system are changed for a fixed design of the chamber. For solid rockets, the gains of energy—commonly referred to as 'driving'—can be significantly affected by modifications of the propellant.

Finally, if the geometry of the chamber is significantly altered—as, for example by adding baffles—then the frequencies of the natural modes may be shifted, quite possibly with relatively small changes in the energy losses. That case is represented in Figure 8.2(c).

The preceding discussion is intended only as an introduction to some of the principal ideas applicable to passive control and one way to think of the problems. For gas turbine combustors and augmentors especially, real cases become considerably more complicated, involving normally a great deal of testing. Recent articles by Mongia *et al.* (2005), Krebs *et al.* (2005), Richards *et al.* (2005) and Scarinci (2005) contain informative discussions of experiences with problems in full-scale operating engines.

8.2. Baffles

A 'baffle' is a structure placed in a combustion chamber in such a fashion as to reduce the amplitude of an unacceptable oscillation. There is no unique way to accomplish the desired result, and there are few well-defined rules for either the shapes or locations of baffles. Ultimately the best arrangement of baffles to effect a desired result is established by testing.

Perhaps the earliest discussion of methods to reduce oscillations appears in Chapter 9 of the book *Internal Ballistics of Solid Fuel Rockets* by Wimpress (1950). Although it appeared in 1950, the book actually covers work done during World War II in the period 1941–1945, and therefore does not include discussion of case-bonded grains which were invented later. Figure 8.4 shows qualitatively three configurations of baffles used in solid propellant rockets. Instrumentation available at that time did not resolve oscillations but large excursions of the average pressure are obvious; examples are shown in Figure 8.5.

Attempts to reduce or eliminate the effects such as those shown in Figure 8.5 formed the earliest uses of passive control. The attempts included inhibiting portions of the grain; changing the internal shape; installing resonance rods; and drilling holes in the grain normal to the flow direction. Resonance rods may be regarded as early forms of baffles more familiar in liquid-fueled systems which we will mainly discuss here.

Figure 8.6 is a convincing example of the effectiveness of an array of baffles installed in the F-1 engine, of which five formed the first stage of the Apollo vehicle. Baffles mounted on the injector face and extending longitudinally formed multiple cavities; the array of twelve cavities is shown. Comparison of the two results reproduced in the figure shows that the unacceptable time-dependent motions generated by a pulse were effectively eliminated. For baffles extending from the injector face in a liquid rocket, the three main geometrical variables are the length and height of the baffles or 'blades' as they are referred to; the number of blades; and their orientation. This configuration, also shown in Figure 8.7, became quite common in U.S. liquid rockets: Longitudinal baffles extending from the injector face.

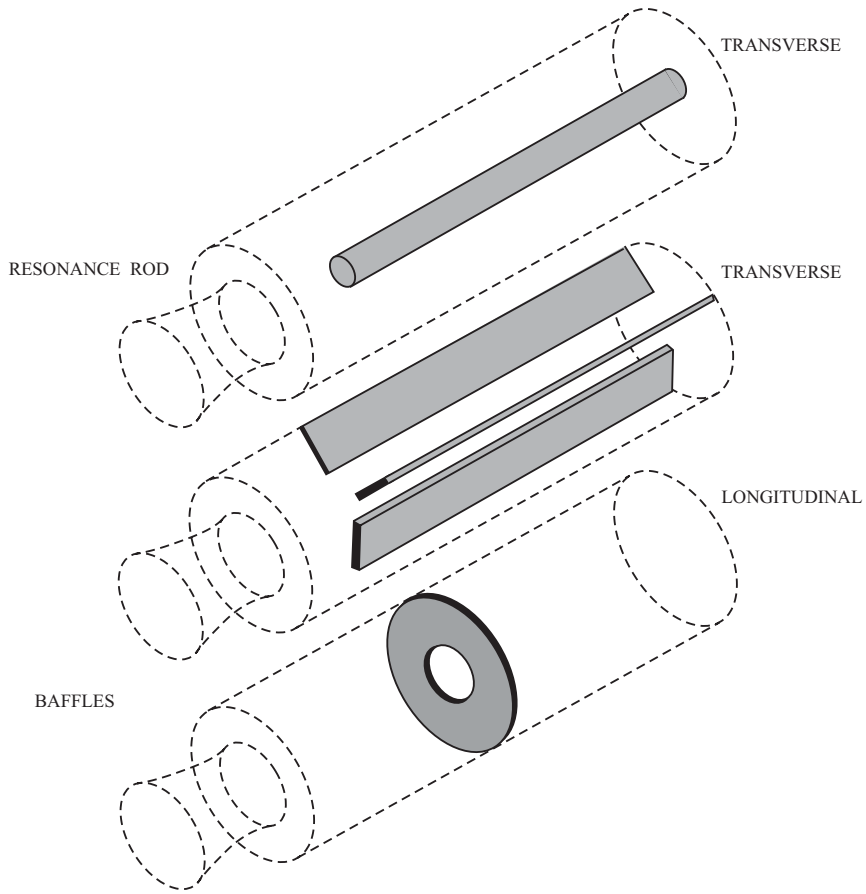

FIGURE 8.4. Simple forms of baffles for solid propellant rockets (Culick 1981).

As shown in Figure 8.8, baffles may be combined with other devices, such as small acoustic cavities. In the example shown, the azimuthal slot along the outer periphery is divided into smaller volumes each of which will contain a mode of oscillation. Because longitudinally a single cavity is closed at one end and open at the other, it supports naturally a quarter wave and is therefore called a 'quarter wave resonator'. If it is to be effective, such a cavity must be 'tuned' to support a quarter wave of the correct frequency. That is, the dimensions must be correctly chosen, a process which is guided to some extent by theory but in practice involves trial and error. The temperature in the cavity is always known poorly and cannot be computed accurately. Thus, determining actual behavior must always await test results.

Chapter 8 of the volume by Harrje and Reardon (1972) contains an extensive discussion of baffles. More detailed considerations of particular applications and of special characteristics are covered in references cited there. Figure 8.9 suggests the wide variety of baffles used in liquid rockets. The configuration chosen in a specific application is motivated, in the first instance, by the characteristics of the mode to be suppressed. Figure 8.10 shows the pressure fields for seven of the lowest transverse modes in a circular cylinder. It is easy to sketch the associated velocity fields. Then a configuration of baffles may be chosen to interrupt the motions, thus preventing formulation of the mode in question, as indicated in Figure 8.9. Oberg, Haymes and Wong (1972) have given a brief summary of devices used to suppress oscillations in solid rockets. Installation of baffles was the authors' preference for relatively low frequencies, the favored orientation being normal to the wave motion. Table 8.1, taken from Oberg, Haymes and Wong, summarizes many practical considerations for baffles and for cavities, covered briefly in Section 8.3.

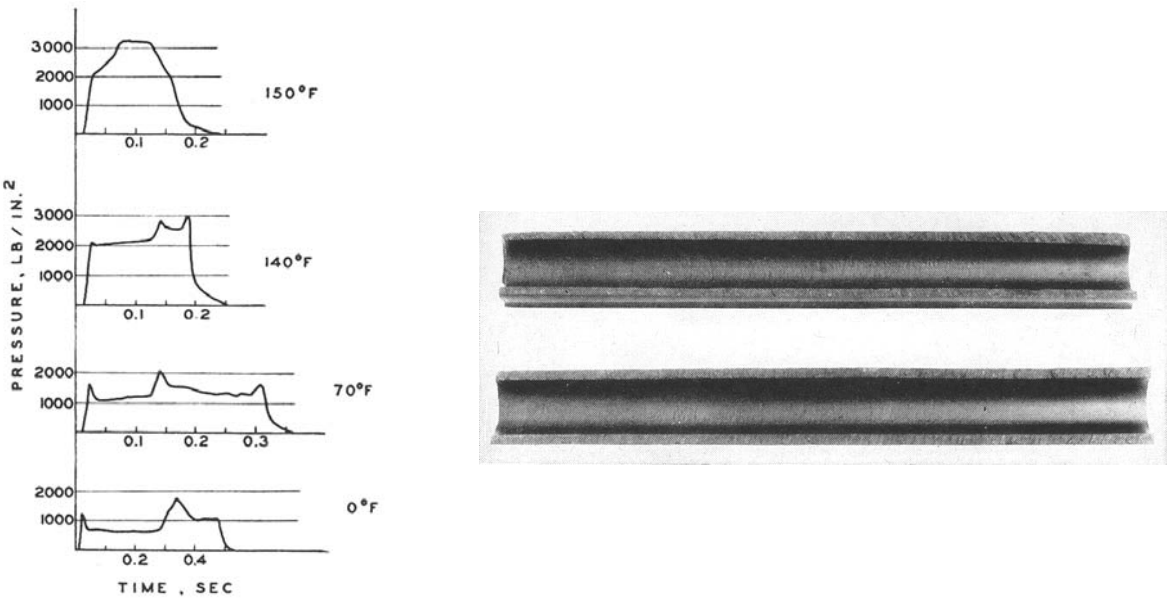

(a) (b)

FIGURE 8.5. Early examples showing consequences of high-frequency oscillations. (a) Departures of the mean pressure from design values. (b) Uneven burning of a propellant grain due to oscillations (Wimpress 1950).

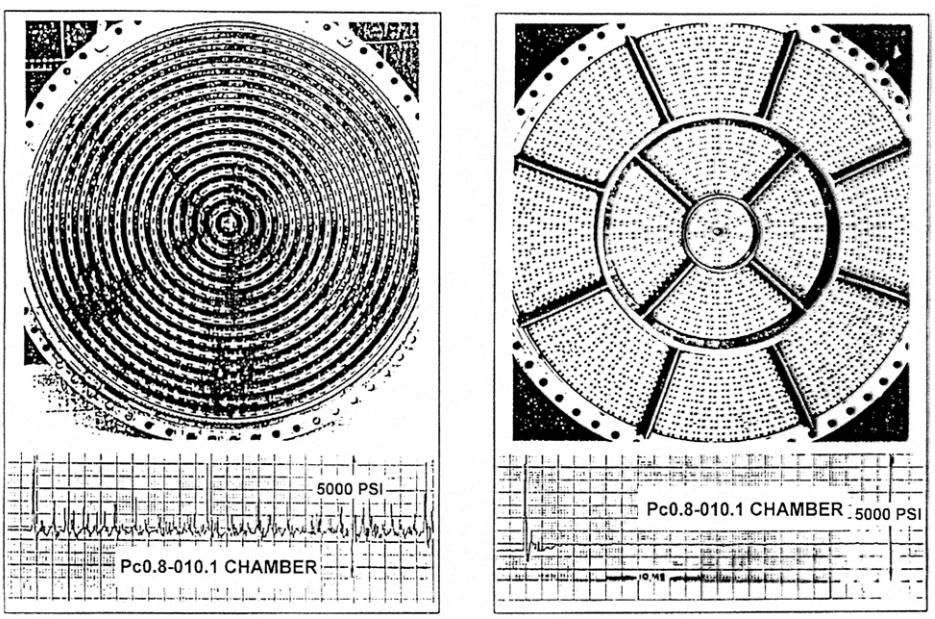

FIGURE 8.6. The importance of baffles in the F-1 engine (Oefelein and Yang 1993).

An unusual application of baffles, of a disposable sort never used in the U.S., is shown in Figure 8.11(a), a photograph of baffles for the Russian RD–0110 liquid-fueled engine (Rubinsky 1995). The instability was a longitudinal mode and as Figure 1.15 shows, the baffles were installed to be oriented with, not normal to,

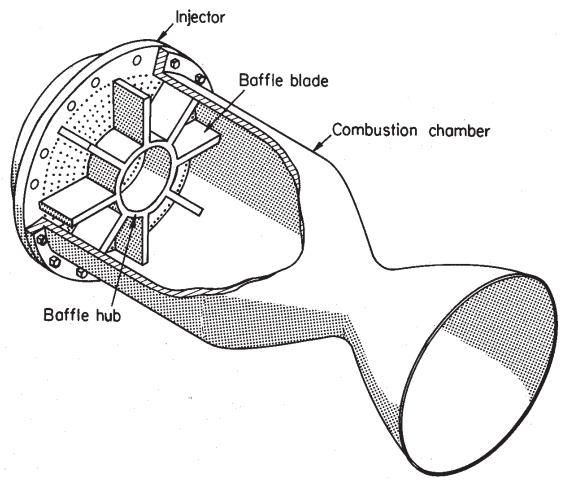

FIGURE 8.7. Perspective view of a rocket combustion chamber with longitudinal baffles installed on the injector face (Harrje and Reardon 1972).

FIGURE 8.8. An injector with baffles and azimuthal slots (Harrje and Reardon 1972).

the wave motion. Moreover, what is unique, the 'ribs' were designed to be consumed very early in a firing and so were fabricated of felt. Figure 8.11(b) shows the very significant reduction of the amplitude of the instability due to the ribs. Evidently in this case the ribs acted practically as pure absorbers, and did not greatly affect the modal shape of the wave motion.

Mitchell and his students have for many years used linear theory to study the effects of various configurations of baffles on the acoustic field without taking account of a mean flow. An accessible discussion of their work appears as the article by Baer and Mitchell (1977). Their accomplishments are summarized as part of the report by Mitchell *et al.* (1987).

The most extensive calculations for a simple configuration, to determine the main nonlinear acoustical effects of baffles appear in the paper by Wicker, Yoon and Yang (1995). A concise survey of work on baffles is included as the introduction. Both linear and nonlinear behavior are covered, based on the formulation summarized here in Chapters 4–7. The details of the analysis are of course conditioned by the configuration treated, which is shown in Figure 8.12. No combustion or flow were taken into account, but the calculations form an example of the approach which can be useful for investigating the properties and effects of baffles. The calculations can be extended to configurations other than that shown in Figure 8.12, but no further results have been reported and there are no experimental data.

It is a straightforward matter to gain an initial idea of how effective a baffle is by making measurements in a model at room temperature. For example, the procedure has been used by Laudien *et al.* (1995) to assess the effectiveness of both resonators and baffles. Figure 8.13(a) shows their experimental arrangement, with the results for the spectrum of modes plotted in Figure 8.13(b). Figure 8.14 suggests the two well-known methods for measuring the damping factor and Figure 8.15 shows measured decay rates per cycle of oscillation for the first five tangential modes of the model shown in Figure 8.13(a). The values for the decay rate measured in this way will not be the same as those applicable under operating conditions at high temperature and with flow. However, as a qualitative indication, room-temperature measurements and observations are extremely useful.

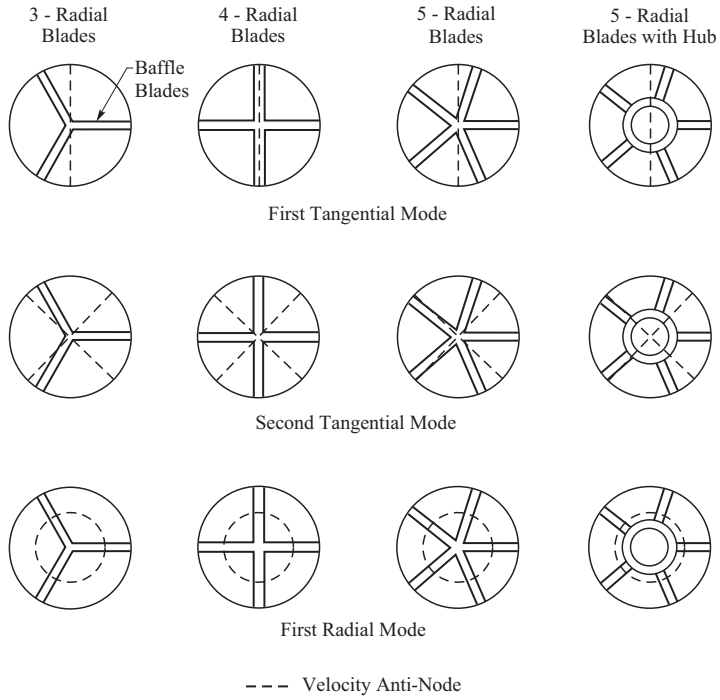

FIGURE 8.9. Examples of the arrangement and shapes of baffles fixed to the injector face of a liquid rocket (Figure 8.2.2d of Harrje and Reardon 1972).

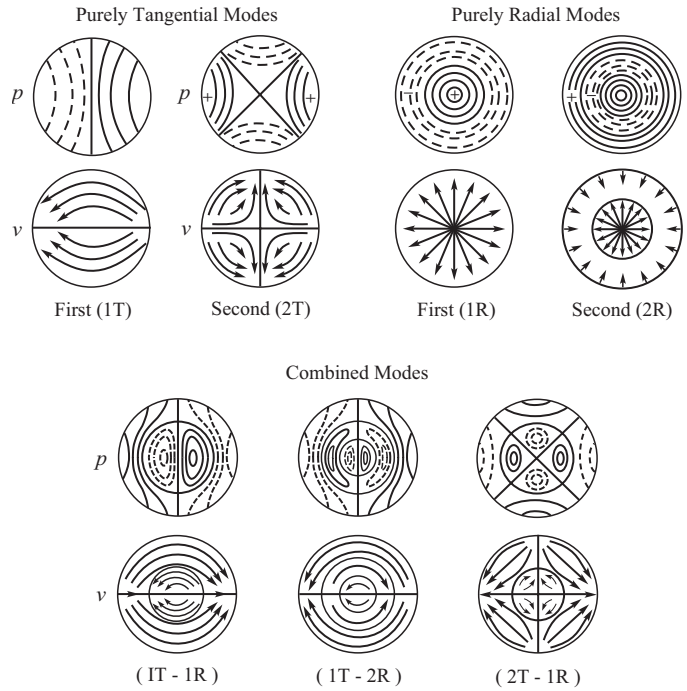

FIGURE 8.10. The pressure fields for the lowest order modes commonly encountered in circular cylindrical combustion chambers (Figure 8.2.2b of Harrje and Reardon 1972).

TABLE 8.1. Considerations of Baffles for Application to Solid Propellant Rockets (Oberg, Haymes and Wong 1972).

Type of Suppression Device	Transversely Oriented Baffles		Longitudinally Oriented Baffles (Rods and Paddles)	Cavities	
	Orifice	Tab(s)		Integral with Igniter	Located in Forward or Aft End of Case
Fabrication of the Device / General Materials Used	Insulation/Structure– High pressure molded filled phenolic/epoxy	···same···	···same···	···same···	···same···
	Structure-Steel Graphite– Titanium or high temp metal	···same···	···same···	···same···	···same···
Component Fabrication Processes	Insulation/Structure– Cut or machined from sheets or slabs or lay-up/wrap-cure	···same···	Insulation/Structure– Cut or machined from sheets or slabs or lay-up/wrap-cure plus molded rods	···same···	···same···
	Structure–Machined, forged, or molded	···same···	···same···	···same···	···same···
Assembly Fabrication	Integral molding/wrapping of plastic to metal support or mechanical attachment	···same···	···same···	···same···	···same···
Special Installation Preparations/Procedures	Plastic parts stored in low-humidity condition	···same···	···same···	···same···	···same···
Quality of Materials and Fabrication Processes	Materials used should be certified and some degree of receiving inspection used. Critical areas should receive rigorous final inspection	···same···	···same···	···same···	···same···
Motor Adaptations and Installation Requirements / Special Case Structural Features Required	Internal tabs or rings may be required to locate and fix the assembly in place. Hard wall insulation may be used	···same···	Internal frames, rings, or attachment points in domes may be used	Igniter structure attach features may be governed by integral cavity configuration	Integral tabs or ring(s) may be required to fix assembly in place
Special Case Insulation Features Required	Insulation may have to be installed in sections and have special fillets and seals to interface with assembly	···same···	Cutouts in dome insulation and special fillets may be required	···same···	···same···
Special Grain Inhibiting Required	Grain may have to be inhibited on one or both sides of orifice assembly. Special sealing at wall interface may be required	···same···	Secondary support on internal surface of grain may require local surface protection	None	Grain may require end inhibitors depending on configuration
Special Grain Casting/ Trimming Procedures	Two grain casts may be necessary with curing, trimming, and inhibiting for each, or perforated baffle coordinated with casting plate	···same···	None, unless design interferes with grain. If required integrated grain-baffle cast tooling must be so designed	Can be none, or provide for recess or clearance by casting mandrel design or grain trim	Grain may require end cast relief or trim depending on configuration
Special Ignitor or Ignition Features Required	None, unless orifice area causes abnormal ignition response or transient condition	None	Attach structure may be integral with igniter assembly. Heat absorption by device may require igniter tailoring	Can be integral with igniter structure	None

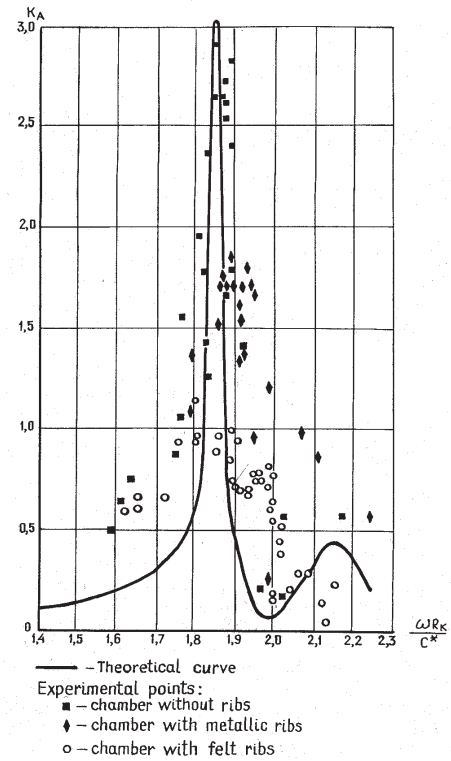

(a) (b)

FIGURE 8.11. (a) Combustible longitudinal baffles (ribs) in the Russian RD–0110 engine and (b) their substantial effects on the amplitude of oscillations (Rubinsky 1995).

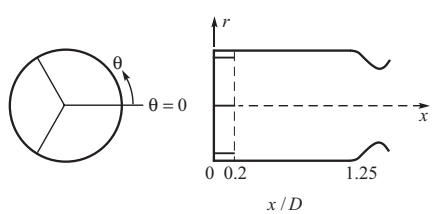

FIGURE 8.12. The combustion chamber with a three-bladed baffle analyzed by Wicker, Yoon and Yang (1995).

An important effect of a baffle is often 'shadowing' of the combustion zone from flow disturbances, particularly the fluctuating velocity associated with acoustic waves. This is evidently a major reason for the effectiveness of baffles on the injection face in the F-1 engine, Figure 8.6. However, the secondary flows, including unsteady vortices, make this method virtually impossible to perfect. Not only is the actual flow difficult to compute, but it is also not easily reproduced in the laboratory. There are no experimental results directed explicitly to the matter of shadowing.

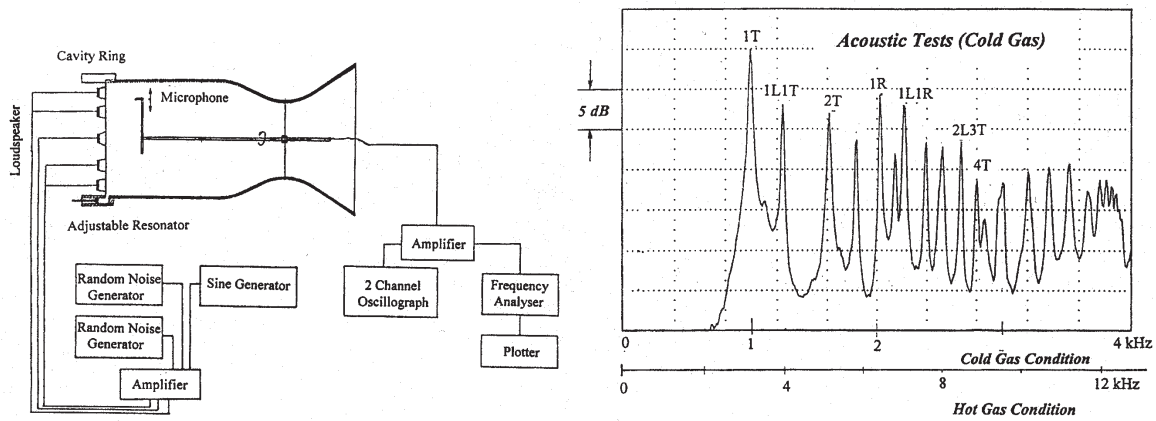

(a) (b)

FIGURE 8.13. A model of a rocket chamber and the measured spectrum of tangential modes (Laudien *et al.*, 1995).

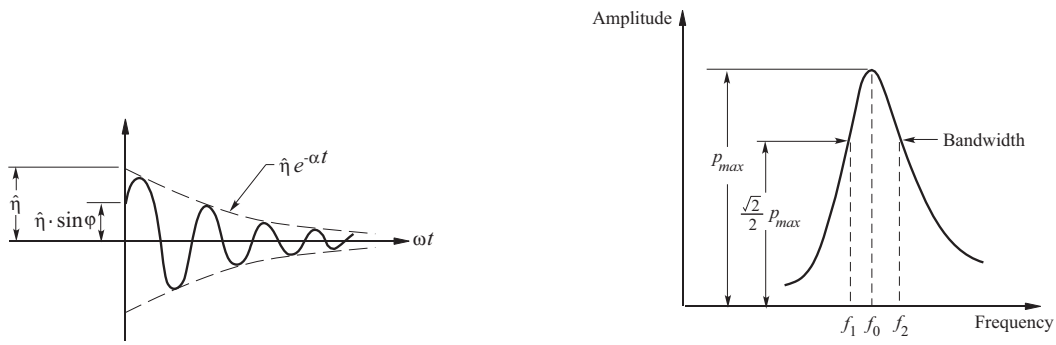

(a) (b)

FIGURE 8.14. Two methods for measuring the damping factor: (a) decay rate, α; (b) bandwidth.

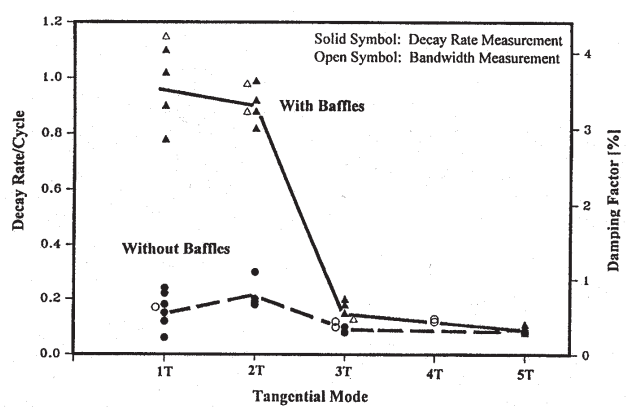

FIGURE 8.15. Results for the decay rate of tangential modes in the chamber shown in Figure 8.13(a) (Laudien *et al.* 1995).

8.3. Resonators and Acoustic Liners

Resonators are the basic elements of acoustic liners which consist of many elements arranged on the surface of a combustor. The most important properties of an acoustic resonator are that it responds to an incident acoustic wave having frequency in a more-or-less narrow range depending on the geometry of the device and the amplitude of the wave; and the wave produced (reflected) in the response, while it necessarily has the same frequency as the incident wave, will be scattered into many directions. Because of the second property, a resonator causes the incident wave to lose energy independently of any viscous effects which add significantly to the losses. It is that energy loss that makes a resonator such an attractive and important tool in practical control of combustion instabilities.

The earliest use of resonators seems to be that reported by Fox (1951), to attenuate oscillations in a ramjet. An array of orifices was cut in the lateral boundary, backed by small cavities, one for each orifice, thus forming an array of resonators. That general idea, known from the beginning of concerns with combustion instabilities, is used at the present time, notably in afterburners, but also in gas turbines and liquid rockets. In fact, for practical purposes, much of the development of resonators and acoustic liners was completed by the 1970's. Representative references include Blackman (1960); Chapter 8 of Harrje and Reardon (1972); Utvik and Blackman (1965); Phillips and Morgan (1967); Phillips (1968); and Phillips, Hannum and Russell (1969). The principal part of the behavior that required special attention was the influence of flow, both through the orifice and parallel to the opening, sometimes referred to as grazing flow. Experiments were often motivated by the need to specify the behavior in terms of a small number of parameters.

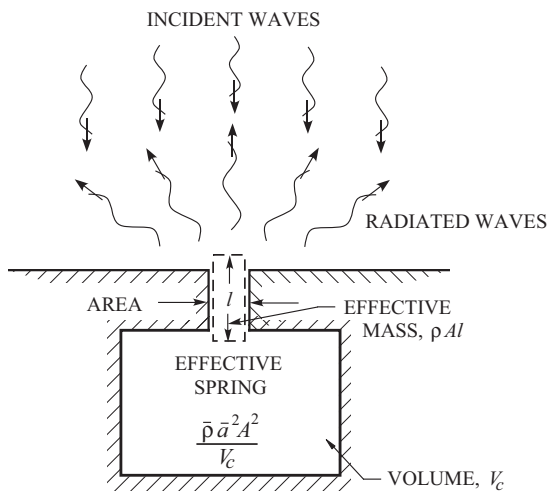

FIGURE 8.16. The essential features of an idealized cavity resonator.

An idealized resonator is sketched in Figure 8.16. The simplest view of the device is that it is a simple mass/spring/dashpot system. A plug of fluid mainly in the neck, but including small amounts from the environment at both ends, is the mass; the springiness is provided mainly by the fluid in the cavity having volume V_c. Damping—identified with the 'dashpot'—accompanies the motion, being caused partly by viscous forces and partly by radiation of acoustic waves that do not combine with the incident wave. Suppose that the damping force on the plug of fluid is proportional to its velocity. Then with the definitions given in Figure 8.16, the equation of motion of the plug is

$$\bar{\rho} A l \frac{d^2x}{dt^2} + \gamma \frac{dx}{dt} + \frac{\bar{\rho}\bar{a}^2 A^2}{V_c} x = A\hat{p} \cos \omega t \tag{8.3}$$

where x is the excursion of the plug from its equilibrium position.

Damping has a small effect on the frequency which we ignore in the interest of simplicity. With $\hat{p} = 0$, we have the equation of motion for an undamped oscillator.

$$\bar{\rho} A l \frac{d^2 x}{dt^2} + \frac{\bar{\rho}\bar{a}^2 A^2}{V_c} x = 0 \tag{8.4}$$

The frequency of the undamped, unforced oscillator is

$$\omega = \bar{a}\sqrt{\frac{A}{lV_c}} \tag{8.5}$$

If damping is included, the frequency is reduced by a small amount. The formula (8.5) already shows that using a resonator as a means of affecting low-frequency motions is impractical because the size must be large. For example, suppose the frequency is 100 Hz so $\omega = 200\pi$ s^{-1}. Take $\bar{a} = 1000$ m/s and (8.5) gives $\sqrt{A/lV_c} = \pi/5$ so $A/lV_c = \pi^2/25 \approx 0.4$ m^{-2}. A reasonable hole might have diameter comparable to its thickness: $A/l \sim (\pi l^2/4)/l \sim l$ so $A/lV_c \sim l/V_c \sim 0.4$ m^{-2}. and $V_c \sim (0.4/l)$ m^3. The neck of a resonator is often cut in sheet material (see Figure 8.15) which we may take to be, say, 2 mm thick, or 2×10^{-3} m. Thus $V_c \sim (0.4)/(2 \times 10^{-3}) \sim 20$ m^3 which is of course unacceptably large. This result shows why resonators are practical for oscillations in the frequency range of thousands of Hertz, not hundreds. If an application requires attenuation in a moderate range of frequency, then a single or small number of resonators may be used, perhaps in combination with baffles, providing there is sufficient volume available for the cavities. In the range of frequency where resonators are commonly used, they are most commonly used in the form of acoustic liners.

'Acoustic liner' is the term used to describe the structure covering all or part of the lateral boundary of a combustor. Figure 8.17 is a good example used on a 15,000-pound thrust rocket motor. Probably the two main problems arising with installation of a liner are tuning so oscillations in the troublesome frequency range are attenuated; and cooling. See Section 8.3.5 of Harrje and Reardon (1972) for a good discussion of the cooling problem and its practical solution for liquid rockets.

It is probably true that acoustic liners are used more widely in gas turbines and their components than in any other application. They are part, for example, of inlet design to reduce the amount of noise radiated forward of transport aircraft. Here we are concerned only with acoustic liners incorporated in rockets and thrust augmentors. It is accepted practice to incorporate a liner as part of the basic design of an augmentor to attenuate screech or relatively high frequency oscillations. Lower frequencies require special measures, such as modifying the distribution of injected fuel, even to the extreme of shutting off some of the injectors. Such problems may determine limits in some parts of the flight envelope.

The problem of cooling is commonly reduced by directing a 'bias flow' through the liner. Hughes and Dowling (1990); and Jing and Sun (1998) seem to have reported the last works on the subject. A central question is: In what respects does a bias flow affect the acoustics of the liner? Hughes and Dowling worked out a theory for the absorption coefficient and its dependence on $\kappa a \equiv \omega a/\nu$ where $2a$ is the diameter of the holes and ν is the mean velocity of the bias flow. Both they and Jing and Sun measured the absorption with a form of the impedance tube method (Section 5.11) sketched in Figure 8.18.

A system of holes in a liner supported some distance from a (nearly rigid) wall, with or without a bias flow, has certain resonance and reflection properties which depend on the various geometrical parameters and the bias flow. It is those properties that matter for practical applications. For example, the effective absorption by a liner depends on, among other quantities, the thickness of the liner material and the size and spacing of the holes. In these experiments, the principal parameters are the Mach number of the bias flow, certain geometrical parameters and a 'resonance parameter' Q defined by Hughes and Dowling. The resonance parameters are proportional to the square of the wavenumber times the distance d between the

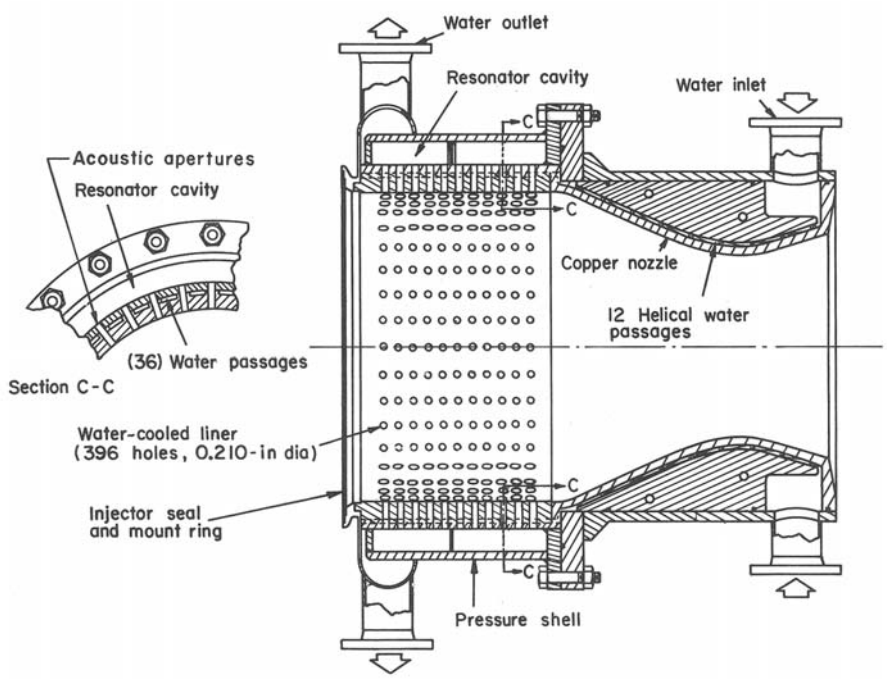

FIGURE 8.17. Convectively cooled thrust chamber fitted with an acoustic liner (Figure 8.3.5b of Harrje and Reardon (1972).

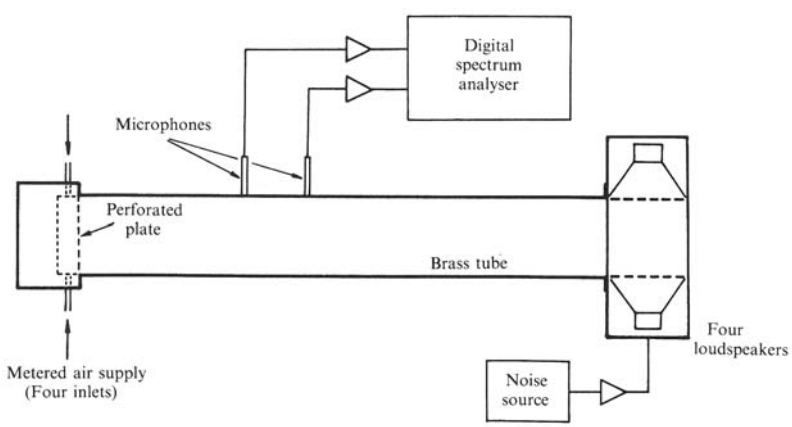

FIGURE 8.18. Apparatus for measurement of the acoustic properties of a model of a liner with bias flow (Hughes and Dowling 1990).

apertures; and proportional to the ratio of the depth l of liner divided by the diameter $2a$ of the holes,

$$Q = (kd\cos\theta)^2 \frac{l}{2a} \tag{8.6}$$

where θ is the angle between the direction of wave propagation and the normal to the wall. Figure 8.19 shows a comparison of the theory worked out by Hughes and Dowling with some data taken by themselves and by Jing and Sun. It appears that the general basis for design of acoustic liners is settled. The difficult matter of mounting liners in the hardware at hand must be solved specially for each case.

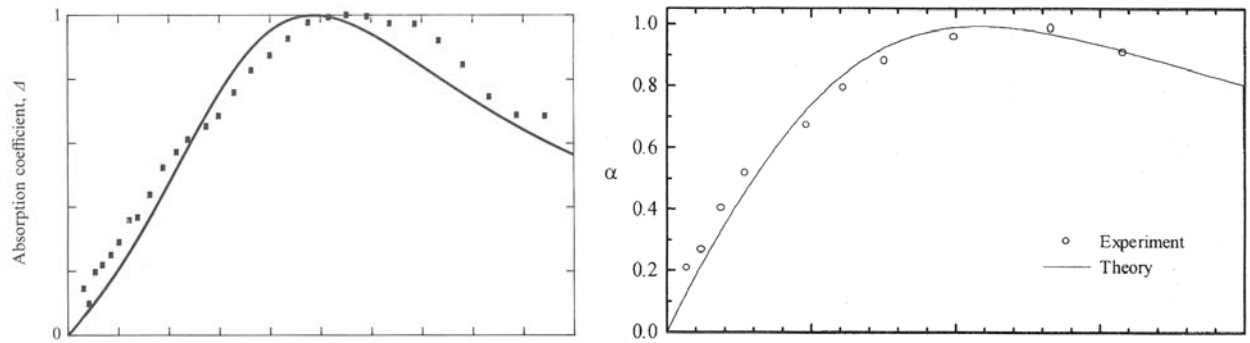

(a) (b)

FIGURE 8.19. Absorption coefficient for a portion of acoustic liner (a) from Figure 7 of Hughes and Dowling (1990); (b) from Figure 7 of Jing and Sun (1998).

8.4. Damping Due to the Formation and Presence of Particulate Material

Sometime after aluminum powder (particle sizes $< 100\mu$ usually much less) was introduced as a significant constituent in solid propellants, it became apparent that amplitudes of combustion instabilities were often much reduced. Apparently Neustein and Altman (1958) first proposed that the reason was the dissipation of acoustic energy by viscous interactions between Al_2O_3 particles and the combustion gases induced by oscillatory motions. The idea was based on earlier work done by Epstein and Carhart (1953) which we mentioned in Section 6.14.3. An alternative interpretation, which also has a long history, is based on the idea that condensed-phase reactions may be effective, especially if they are **ex**othermic. Waesche (1999) recently published a note discussing the relative merits (and truths) of these contrasting views. A test program was carried out some years ago using an unspecified, but large (perhaps 25–30), number of small cylindrical laboratory motors 11.5 inches long, having initial port diameters of 5 inches. The motor oscillated in its first tangential mode, having frequency 4800 Hz soon after ignition and 4000 Hz at burnout.

Many tests were run, using several additives as well as aluminum and Al_2O_3. It is inappropriate here to try to describe the details or to summarize the test program. Waesche's main conclusion was that "heat release near the surface was a significant factor in the effective suppression of instability." Photographs of the combustion zone supported the idea that those additives were most effective that "liberated large amounts of energy." The results suggested that "incorporation of an additive that supposes oscillations by releasing energy appears to be a more practical method of eliminating combustion instability than one based solely on particle damping."

There is other (publicly unreported) evidence that **ex**othermic reactions in the region where the solid is converted to gas may be responsible for damping or reducing the amplitudes combustion instabilities; for example, reference 4 of Waesche's note evidently supports the case. An analysis such as a modified form of the sort carried out in Section 2.2.4 could probably be used to confirm the proposal; it seems that the calculations carried out specially for this purpose remain to be done.

Quite a different source of attenuation of oscillations are the responsive motions of particulate matter, the idea introduced by Neustein and Altman. We have given an appropriate analysis of the basic phenomenon, and data confirming the results, in Section 6.14.3. To summarize, the idea is roughly the following. A solid propellant containing aluminum to increase its specific impulse, produces condensed aluminum oxide (Al_2O_3) among its combustion products. For example, a propellant containing 19% aluminum (said to be "heavily aluminized") will produce 42% by mass of aluminum oxide in its products of combustion. As an actual example, the propellant in the Space Shuttle booster motors contains 16% aluminum; the exhaust therefore

consists of roughly 58% gases and 42% liquid. Many small tactical rockets contain comparable amounts of aluminum. The presence of a significant amount of Al_2O_3 has the secondary effect of attenuating unsteady motions. Note that at the usual combustion temperatures ($> 3000°F$) the Al_2O_3 is liquid and exists in combustion chambers as droplets normally having sizes from the sub-micron range to tens of microns.

The attenuation of sound by particles suspended in a gas has a long history beginning with calculations of the absorption of sound by fog, by Sewall in 1910[1]. Epstein (1941) discussed comparison of the experimental results (Knudsen 1931; Laidler and Richardson 1938) with the theory which had been improved by Lamb (1932) and by Epstein himself. Epstein and Carhart (1953) worked out essentially a complete theory for the attenuation of sound by non-interacting spherical particles; both the acoustic field and the motions of the particles are described by linear equations. The formulas derived in Section 6.14.3 are much simplified forms of those given by Epstein and Carhart but, the experimental work by Kraeutle, discussed below, has established that the approximations are apparently quite accurate.

There are several important consequences of having large amounts of condensed material in a gas. We are concerned here only with the two main effects that interactions between the wave motion and the motions of the particles may have: the propagation speed of the waves is reduced; and the energy of the wave motions is dissipated. Figures 6.22 and 6.23 show the approximate results for the frequency shift and attenuation of a sinusoidal wave propagating in a gas containing particles having uniform size and uniformly dispersed. The fractional change in frequency of a wave having fixed wavelength, as for a standing wave in a closed volume, is equal to the fractional change of the speed of sound. From the relation $\bar{a} = f\lambda = \omega\lambda/2\pi$, we have equation (6.103),

$$\frac{\delta f}{f} = \frac{\delta\omega}{\omega} = \frac{\delta\bar{a}}{\bar{a}} \tag{8.7}$$

where here the basic change of the speed of sound is due to a change in the number density of particles. We find $\delta\bar{a}$, or $\delta\omega$, from Figure 6.39. For a propellant containing 15% aluminum ($\mu = 0.15$ in equation 6.216), $C_m = 0.4$, and the reduction in the speed of sound is about $\delta\bar{a} = 0.163\bar{a}$.

The dissipation of energy associated with the presence of particles is another matter that has for some time been recognized as an important means of passively controlling combustion instabilities in solid propellant rockets. Part of the reason for strong practical interest in this behavior is the connection between attenuation, particle size and frequency of oscillation shown in Figure 6.39. What is particularly important is the fortuitous circumstances that the particle sizes produced in most solid rockets are in the range for which the attenuation is greatest for the frequencies of oscillations encountered. Finally, there is a firm basis for performing the calculations necessary to understand the general behavior and, in principle, carry out the required design procedure. The most difficult part of ensuring that the desired conditions are reached in practice, a goal dependent on the physio/chemical conditions which are partly dependent on uncontrollable conditions within the combustion processes.

There are many reports of using purposely altered particle sizes to affect (the intent is to do this favorably) the attenuation of acoustic waves by particle damping. A particularly clear discussion of the matter was given by Derr, Mathes and Crump (1979) which we summarize here. Earlier reports of the background and progress of the work were given by Mathes *et al.* (1978), Kraeutle (1977) and Kraeutle *et al.* (1976). A central motivation for the series of works was to optimize the attenuation of acoustic waves due to small particles ('particle damping') by providing the appropriate size distribution of particles. Because the necessary measurements are carried out in a motor, the information is obtained for the particular operating system in question. We assume here that the properties of the unstable motions, notably the dominant frequency, are known from observation of actual firings. Thus we restrict attention to the particles which we assume are mainly Al_2O_3 produced in the combustion of aluminum in the propellant.

[1]Zink (1957), and briefly Zink and Delsasso (1958), have reviewed the history of the subject.

Figure 8.20 is a diagram showing the strategy. If this procedure is to be successful, there are, at this stage, three crucial processes which must be well in hand:

(i) Collection of particles from motor firings;
(ii) Analysis of the size distribution;
(iii) Modification of the propellant to effect a favorable in the size distribution.

The details of these three important procedures are outside the scope of this book. We intend here only to indicate what must be done by outlining the special example treated in the reference cited.

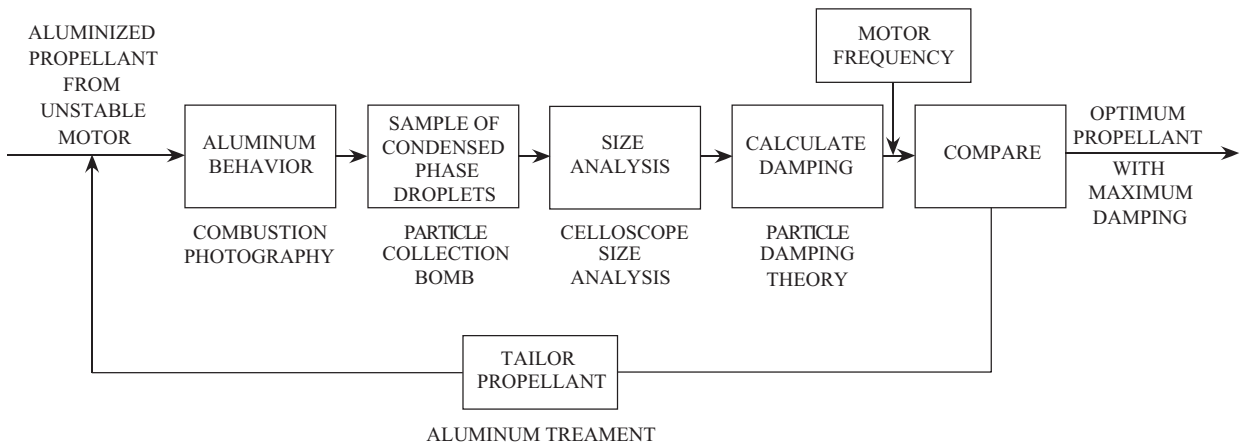

FIGURE 8.20. Scheme of a procedure followed to improve the attenuation of combustion instabilities by increasing the particle damping (Derr, Mathes and Crump 1979).

The example is based on a motor cast with a metallized double-base propellant which showed unacceptable oscillations in the range of frequency 2K to 4K Hz. Samples of the propellant were burned at the motor pressure. Collection of the particles and analysis of the sizes gave the results shown in Figure 8.21 with comparable results from a more 'conventional' motor.[2] Figure 8.22 is a comparison of the particle damping calculated with the method discussed in Section 6.14.3, for the size distribution shown in Figure 8.21; and the particle damping for two uniform size distributions giving optimum damping respectively at 2 KHz and 4 KHz. Evidently the actual particle size distribution is quite far from the best possible. This result was accepted as the reason that the motor had a problem with oscillations. Correcting the problem required measures not discussed in the reference.

[2]The configurations of both motors were omitted from the references.

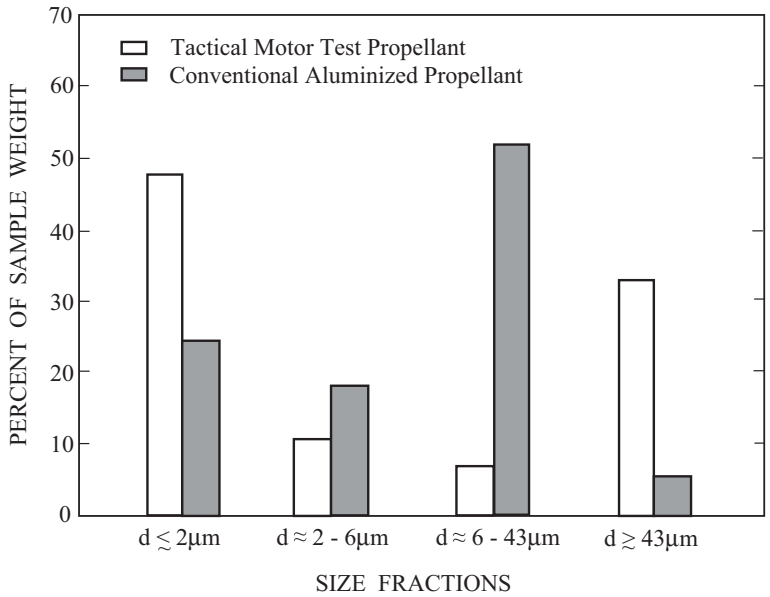

FIGURE 8.21. Particle size distribution for tactical motor propellant and a conventional aluminized propellant (Derr, Mathes and Crump 1979).

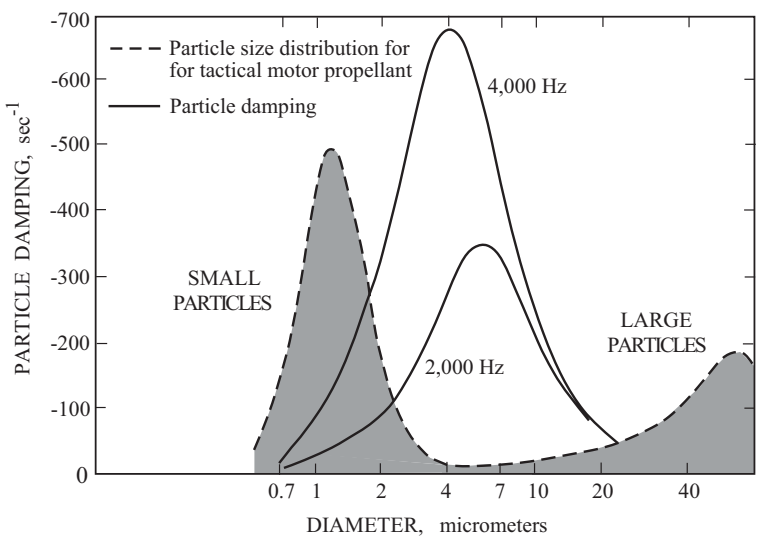

FIGURE 8.22. Comparison of particle size distribution to optimum size for damping in motor (Derr, Mathes and Crump 1979).

8.5. Dynamics of Injection Systems

Liquid-fueled systems offer a special possibility for passively controlling oscillations, based on the dynamics of the injection system. The subject has been discussed briefly with the aid of Figure 1.1 in Section 1.2. Probably the most extensive and effective work, both research and practical applications, has been done by Professor V.G. Bazarov of the Moscow Aviation Institute (for example, much of his work is covered by Bazarov 1979, Bazarov and Lul'ka 1978, Andreyev *et al.* 1991, Bazarov 1995, 1998). The most accessible work in English is Bazarov and Yang 1998 in which some of the ideas are summarized.

Put most simply, the essential idea can be stated in the following way. We view the combustion chamber containing the flow of the combustion reactants and products as a dynamical system. The injection system, the supplied reactants, liquid and gas, and the associated processes form a second, extraordinarily complicated system. Thus we view a liquid- (or gas-) fueled system as consisting of two dynamical systems coupled in some unknown way by the injection and combustion processes. This sort of simplified model is implied by practically all treatments of the time-dependent behavior viewed in this fashion; the consequences are pursued as a means for passive control of the dynamics of the combined system.

Much of the discussion in Bazarov's papers is concerned with the fundamental unsteady processes occuring within injection devices and in the injected flows. A significant theme throughout is the use of those unsteady processes and their coupling to the chamber dynamics to control unsteadiness—in particular combustion instabilities—in a combustion chamber. Consequently, a large part of the experimental work is devoted to the dynamics of the injection processes and how they may be used to affect favorably the dynamics of the combined system. See Figure 1.24 and the accompanying remarks.

8.6. Passive Control of Vortex Shedding

Shedding of large vortices has long been a well-known phenomenon in many contexts. Vortex shedding occurs in combustion chambers particularly in flow past blunt flameholders and rearward-facing steps. Rogers (1954) carried out experiments establishing the importance of the first case and reported the work in Rogers and Marble (1956). We discussed their findings in Section 2.3.4; for convenience, Figure 8.23 is a repetition

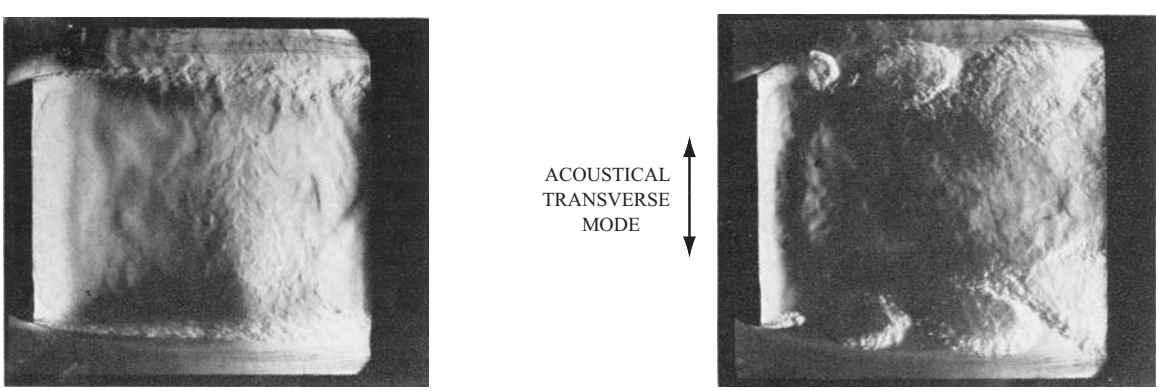

(a) (b)

FIGURE 8.23. Flow past a bluff body flameholder under two conditions of flow at approximately the same speed. (a) low equivalence ratio, $\phi \tilde{<} 0.75$, no oscillations; (b) high equivalence ratio $\phi \tilde{>} 0.90$, transverse acoustic oscillations in the channel (Rogers and Marble 1956).

of Figure 2.32 showing the essential qualitative features. Recall that in this case, the shedding supported a transverse mode, the particle motions being normal to the streamwise (longitudinal) direction. The frequency was about 3800–3900 Hz. Pulses of combustion and heat addition associated with the vortices together formed the driving mechanism of the oscillations. The results obtained by Rogers and Marble and by Kaskan and Noreen (1955) were the earliest confirmations of vortex shedding as a mechanism for oscillations in a combustion chamber.

Figure 8.24 shows an example of vortex formation at a two-dimensional rearward-facing step, accompanied by a longitudinal mode of oscillation (Smith and Zukoski 1985). Several frequencies were detected in this case, the highest being 530 Hz; a spectrum is given in Figure 1.18. Many examples of oscillations in dump combustors have been studied in the past twenty years. Figure 8.25 is a summary of configurations used in tests involving vortex shedding, a modified form of a figure prepared by Schadow (2001).

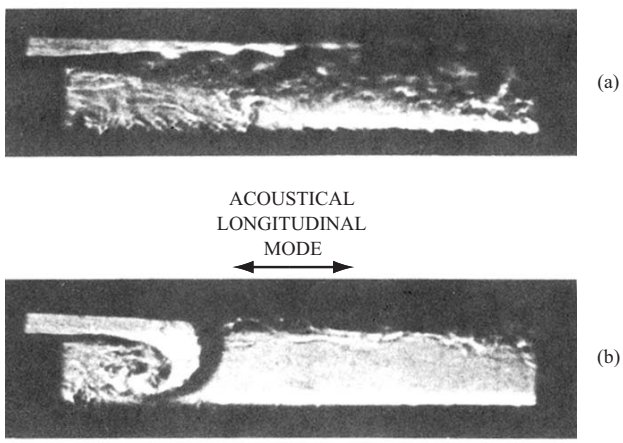

FIGURE 8.24. Vortex shedding from a rearward-facing step. (a) stable flow without vortex shedding; (b) unstable flow with vortex shedding and excitation of longitudinal oscillators (Smith and Zukoski 1985).

Byrne (1981, 1983) was first to propose the idea that vortex shedding in a dump combustor could be the cause of the pressure oscillations observed in tests of full-scale devices (see Section 2.3.4). It is easier to gain understanding of the related but vastly simpler problem of flow in the same configuration without combustion. The most extensive works on this subject have been reported by Schadow, Gutmark and their colleagues (Schadow *et al.* 1985, 1987a,b; 1989; 1990a,b; Gutmark *et al.* 1986, 1989, 1990). Schadow and Gutmark (1992) give a good review of their works, and Schadow (2001) has recently given a concise summary of the same material, covering examples with and without combustion. We draw heavily on those two works for the following discussion.

There is no doubt that the presence of combustion affects the flow in significant fashion. This may be contrasted with the similar problem of vortex shedding at the joints of a segmented solid rocket described in Sections 1.2.5, 2.2.7 and 6.8; combustion is then not part of the problem. In the present case, the same conclusion surely cannot be valid generally. Moreover, it is likely true that as a result of increased mixing, vortices enhance, or, under some circumstances, could conceivably stabilize combustion, even with the penalty of generating oscillations. An important purpose here is first to understand better the relations between vortex shedding and oscillations in the absence of combustion; and subsequently to gain some confidence in the possible applications of passive control. The eventual goal in practice is to reduce the oscillations, and accompanying vibrations, without sacrificing average performance.

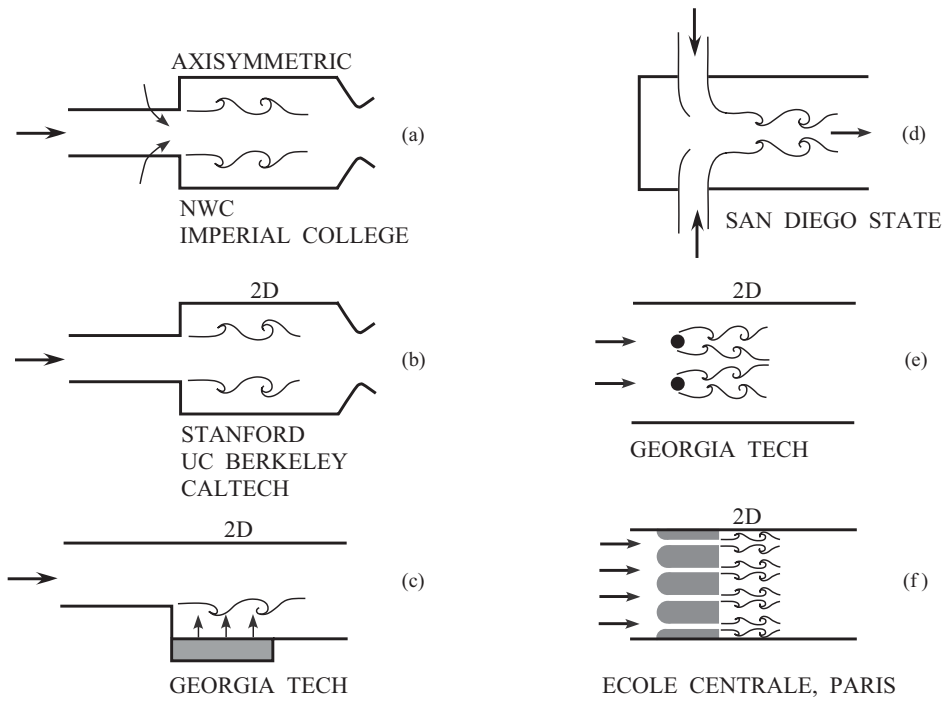

FIGURE 8.25. Examples of configurations used to study vortex shedding in combustion chambers (adapted from Schadow 2001).

The strategy followed to address the problem in dump combustors in a sense has some precedence set by similar problems in solid propellant rockets. As Flandro and Jacobs (1973) first suggested, and Culick and Magiawala (1979) demonstrated with simple apparatus, shed vortices may excite acoustic modes in a chamber if there is close coincidence between the shedding and modal frequencies (see Figure 2.29). For those cases and others related to problems in solid propellant rockets the shedding process is often characterized by a well-defined single frequency. In practice, the "single frequency" has a value which often drifts during a firing, or may suffer abrupt changes. That behavoir is quite characteristic and generally has served as the basis for establishing vortex shedding as the determining mechanism. A particularly clear example makes the point.

The Stage 3 motor of the Minuteman III large booster exhibited two types of instability. For the first five seconds or so of a firing, tangential modes were excited in the slots in the forward portion of the grain sketched in Figure 8.26. There were six fins and slots. The fundamental frequency was 800–900 Hz. Then in the interval five to twenty seconds after ignition, a longitudinal mode having frequency 200–400 Hz appeared. As shown in the 'waterfall' plot, Figure 8.27(a), the frequency exhibited both gradual and slow increases. The variation with time is obviously very different from that of the first longitudinal mode shown by the solid line.

A program was carried out at the Air Force Rocket Propulsion Laboratory (AFRPL) to test G.F. Flandro's suggestion that vortex shedding was responsible for the oscillations in the low frequency range. The steps at the downstream ends of the slots were removed as indicated in Figure 8.26. A waterfall plot for a subsequent firing is shown in Figure 8.27(b); the low-frequency oscillations are absent. Both the range of frequency spanned by the motions shown in Figure 8.27(a) and the trends exhibited, demonstrate beyond doubt that the oscillations were assiciated with vortex shedding from the steps subsequenty removed. Small

changes were caused in the tangential modes. It is hard to conceive of a more convincing demonstration of the connection between nonreactive vortex shedding and pressure oscillations.[3]

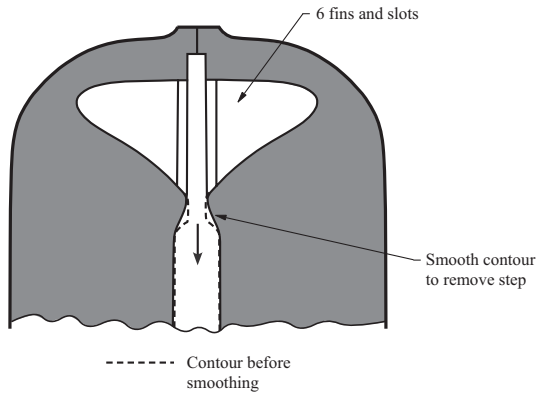

FIGURE 8.26. Sketch of the origin and elimination of pressure oscillations produced in the chamber by vortex shedding in a solid propellant rocket (Flandro *et al.* 1983).

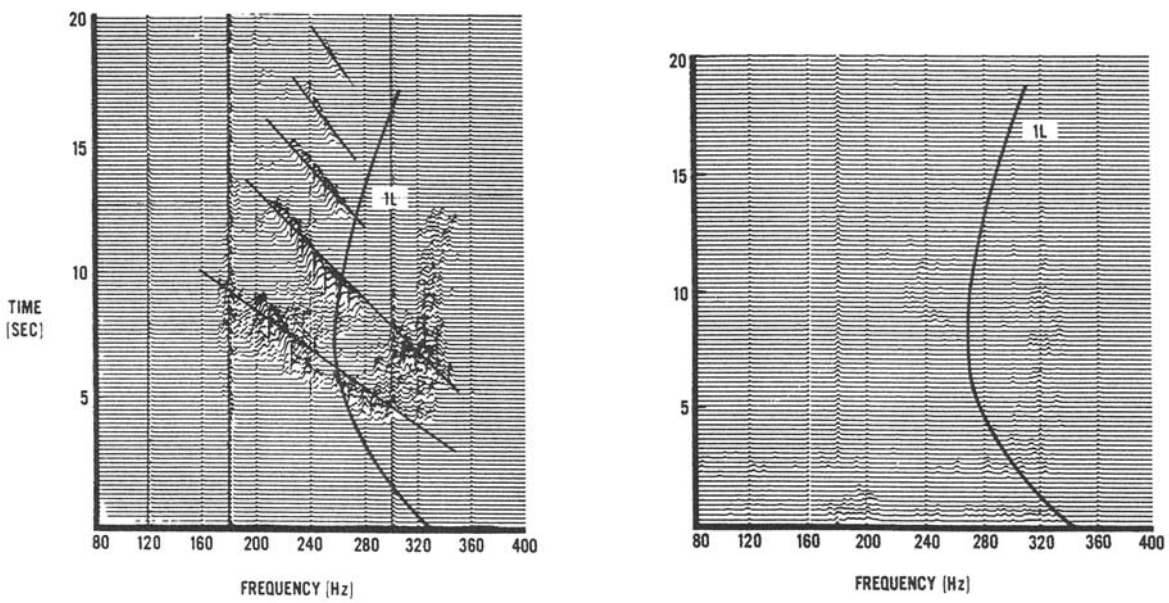

FIGURE 8.27. 'Waterfall' plots of low-frequency oscillations observed in a Minuteman III Stage 3 motor. (a) unstable oscillations produced by large vortices shed at the slots; (b) plot showing the absence of oscillations after modification of the slots (Dawson *et al.* 1981).

The examples we concentrate on here have been thoroughly treated due to concern for the problem of vortex shedding in dump combustors intended for use in ramjets. That problem evolves out of the behavior of unstable motions in the shear layer at the surface of a jet issuing from a circular orifice. Vortices develop near the surface of the jet in roughly three stages, ultimately to influence much of the volume of the jet; the

[3]Recall that the actual cause of the pressure oscillations is the generation of pressure pulses as the vortices are carried by the flow through the nozzle. The pulses then generate waves that reinforce oscillations in the chamber.

shadowgraph in Figure 8.28 shows the behavior in a three-dimensional jet issuing from a pipe.[4] Three fairly well-defined stages can be identified:

(i) initial instability of the shear layer, close to its origin, the most unstable disturbances having frequency f_s (Michalke 1965);
(ii) growth of small, well-defined vortices merging to form larger vortices having the dominant 'preferred mode frequency' f_{pm} near the end of the potential core[5] (Ho and Huerre 1984);
(iii) the subsequent behavior and the physical disposition of the 'train' of vortices depends on conditions in the flow and environment of the jet.

For the example shown in Figure 8.28, the subsequent behavior referred to consisted in a rapid breakdown of the coherent vortices into a field of turbulence. The behavior in Figure 8.28 is to be contrasted with the sustained form of the shear layer in Figure 8.23(a), for example, which involves combustion in flow past an approximately two-dimensional bluff body.

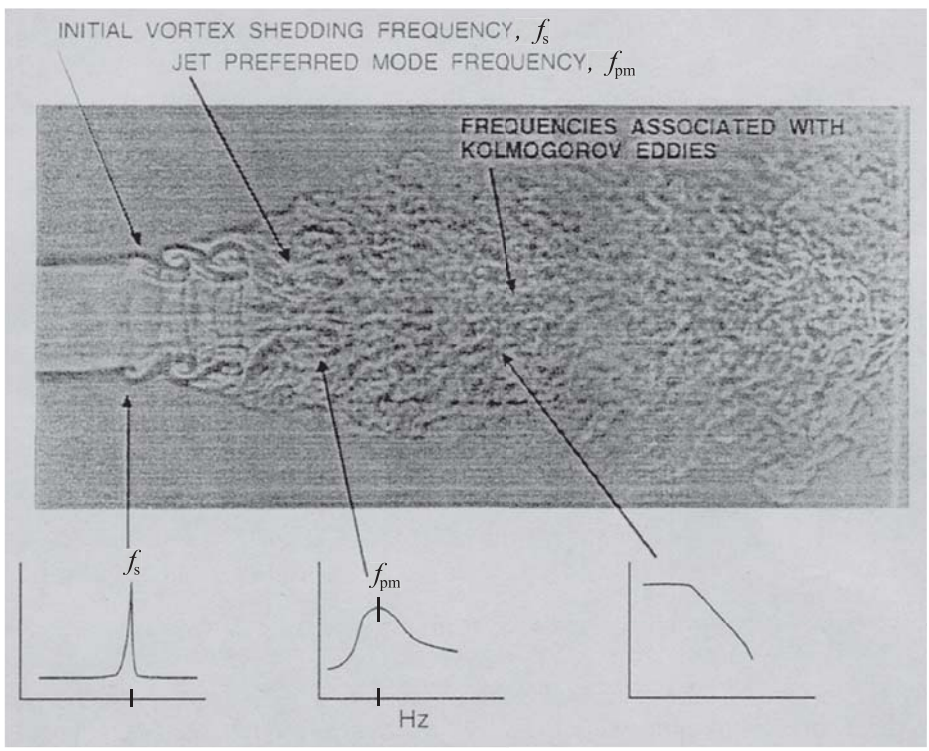

FIGURE 8.28. Cylindrical jet of carbon monoxide into air, initial Reynolds number approximately 30,000 (average speed, 127 ft/s). The photograph is due to F. Landis and A.H. Shapiro, published by Van Dyke (1982). Schadow *et al.* (1987)b added the notes and rough sketches of spectra.

Viewed in a somewhat simplistic form, the problem of passive control addressed experimentally in the works referred to here is essentially the same sort faced by those concerned with acoustic modes excited by vortex shedding in solid propellant rockets discussed in Section 2.2.7. The acoustic oscillations in both cases

[4]The picture was published by Van Dyke (1982), but was attributed to F. Landis and A.H. Shapiro with reference details. Schadow and Gutmark (1989) added the remarks and idealized spectra which have been slightly modified here.

[5]The distinguished frequencies f_s and f_{pm} are denoted f_i and f_j by Schadow and Gutmark following earlier usage; we change notation to avoid confusion with summation indices i and j.

arise because, when an acoustic frequency is approximately coincident with a vortex shedding frequency, a coupling process produces energy transfer from the vortices to the acoustical motions. In neither case are the details of the coupling processes completely known. There is a major difference between the two bodies of work. In those works discussed in this section, much greater emphasis is placed on experimentally exploring the fundamental processes of formation, growth and eventual disposition of the vortices. The main reason is that, unlike the case of solid rockets, there is ample opportunity for lengthy and repeated tests, often with considerable freedom to change the geometry involved.

Investigations of vortex shedding in combustion chambers rest heavily on earlier investigations carried out initially for their own sake, with no particular application intended. Crow and Champagne (1971) had already shown that when the initial portion of the shear layer created by a jet is exposed to acoustic waves there are strong effects on various properties of the flow, including the spreading rate and the strength (size) of shed vortices. Moreover, they found that the forcing was most effective when the frequency of the incident acoustic waves is close to the frequency of the jet's 'preferred mode'.

In 1982, Gutmark and Ho (1982) had shown that an elliptical jet, initially laminar, entrained fluid at many times the rate (up to eight) at which a circular jet does so.[6] Some possible implications for practical application were later investigated by Schadow *et al.* (1984)b. They found, for example, that due to better mixing they obtained higher combustion temperatures and combustion efficiencies with elliptical supply nozzles in the rig they used. Although they remarked on the presence of large-scale structures, they did not elaborate upon their role.

Schadow *et al.* (1987a,b; 1989) carried out extensive tests with the apparatus shown in Figure 8.29. The lower part of the figure is a sketch of the flow field produced by the jet from the inlet duct and flow through the lateral boundary. The orifice at the entry to the chamber was either circular or (roughly) elliptical having a 3:1 aspect ratio in the early tests (1984) referred to above. For the combustion tests gaseous fuel was injected through the lateral wall of the chamber where N_2 was injected for the non-reacting tests. Variations of this basic design were used in most of the NWC tests. The most extreme geometrical departures involved triangular inlet ducts, with fuel injection either at the faces or at the apexes of the triangle (Schadow *et al.* 1990b) and an inlet with a multi-step dump (Schadow *et al.* 1990a).

The motivation for the changes of geometry was of course the well-established correlation between the formation of large coherent vortices, and pressure oscillations. It is helpful to view the situation in simplified form as the interaction between, or coupling of, two dynamical systems: the acoustic field, and the stream of shed, large-scale vortices. Rather than deal with the coupled problem as it develops with vortex shedding occurring naturally in a dump combustor, it is much better to have control over some of the behavior. The most convenient method is based on exciting the acoustic field independently of the vortex shedding process. In their first report of results, Schadow *et al.* (1984a) showed that the response of the flow into a dump chamber (Figure 8.29) was greatest when the forcing frequency approximately matched the 'most amplified frequency', the latter was either the vortex merging frequency in the initial portion of the shear layer near the dump plane; or the preferred mode frequency, f_{pm}, in the flow at the end of the potential core.

Figure 8.30 shows one example of the response of the system measured with a hot wire placed in the potential core of the jet flow exiting the inlet duct.[7] Forcing the flow was accomplished with a rotating valve. The oscillations were longitudinal, the frequencies of the largest response being in the range of one hundred to several hundred Hertz, increasing with the average speed of flow through the chamber. Thus, while the reasoning worked out by Rogers and Marble is relevant, it cannot simply be adopted without change because the acoustic modes are so different.

[6] A hint of the reason for this result had been given in the analysis of the behavior of an isolated elliptical vortex by Dhanak and Debernardinis (1981).

[7] Although Figure 8.30 shows test results (redrawn Figure 2 of Schadow *et al.* 1987a), no data points are shown here or in the original work.

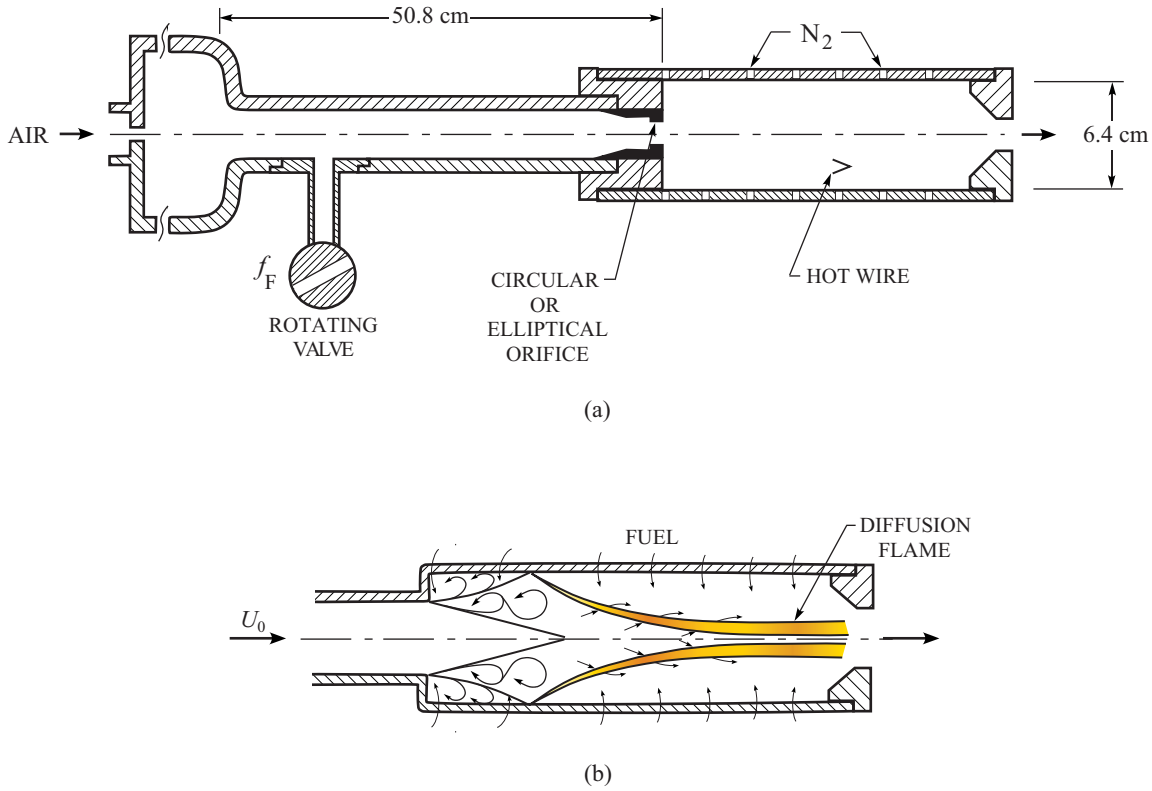

FIGURE 8.29. Test equipment for studying reacting and non-reacting jet flows in a dump combustor. (a) sketch of the complete apparatus; (b) arrangement of the dump configuration for combustion tests (adapted from Schadow *et al.* 1987a).

Without forcing, the response of a hot wire placed as shown in Figure 8.29 is typically like that given by the dotted curve for $U_0 = 71$ m/s in Figure 8.30. The frequency at the peak of the response is called the preferred mode frequency and was identified in the experiments as the 'vortex shedding frequency'. With reduced average speed, the peak of the response curve shifts to lower frequency and seems to be smaller. With forcing—f_F is non-zero—the hot wire shows a pronounced response at f_F, indicating the presence of velocity waves superposed on the natural responses of the jet. The enhanced response implies that higher velocity at the forcing frequency produced more intense vortices, perhaps larger, but that conclusion does not directly follow from these data. Vortices having dominant frequency f_F will always be driven; the response is greatest when $f_F = f_{pm}$, the preferred mode frequency. According to Schadow and Gutmark, the response is least when $f_F = f_s$, the initial shedding frequency.

Tests of that sort suggest the following behavior in the *absence* of forcing. Consider a configuration that may contain shedding of vortices, as for example the case is with an annulus (or two annuli) in a tube, Figure 2.30. If further the configuration will easily support acoustic resonances—or, put another way, acoustic modes are readily excited—the possibility exists for coincidence between the frequencies of the vortex shedding and the acoustic modes. Figures 2.31 and 2.32 show the apparatus and some results for the case of vortex shedding in a pair of annuli mounted in a tube which has well-defined modes. The conditions identified by the open circle correspond to the cases when the forcing frequency f_F equals the preferred frequency f_{pm} in Figure 8.30.

There is therefore no doubt that quite generally near coincidence of the rate of vortex formation and the frequency of an impressed acoustic field will produce a more intense acoustic field or stronger vortices,

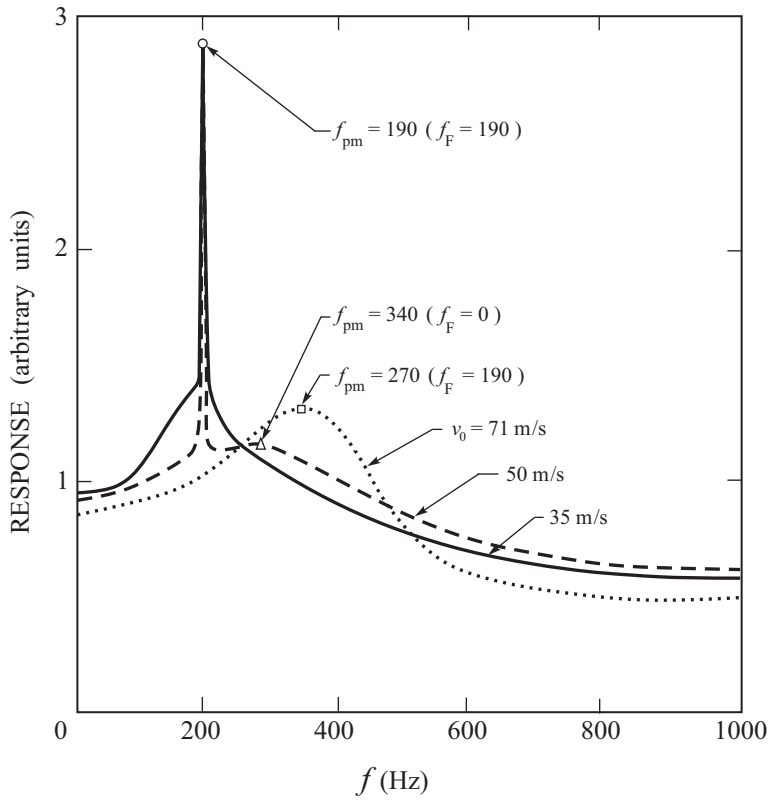

FIGURE 8.30. An example of test results showing the presence of coherent vortices when the acoustic forcing frequency f_F equals the preferred mode frequency f_{pm}, the frequency at the maximum of the response (taken from Schadow *et al.* 1987a). No data points were given in the original figure.

or *both*. The coupled system can extract energy from the average flow field. For successful application of these ideas to combustion chambers, we need to know the extent to which the presence of combustion may affect the fundamental behavior. It appears from available test results that our basic understanding of the shedding of large vortices, and the significance of equality between shedding and acoustic frequencies, are qualitatively unaffected by heat addition and quite large temperature gradients. Essentially that conclusion guided Schadow, Gutmark *et al.* and others in their investigations of methods to eliminate oscillations in dump combustors by passive means.

As the works referred to in Figures 8.23–8.25 have shown, there is virtually an inevitable correlation between the shedding of large vortices and excitation of pressure oscillations in combustion chambers. The significance of resonance between the shedding process and the acoustical vibrations of the chamber has been shown experimentally by a convincing range of tests with and without combustion. Consequently, the possibilities for exercising passive control fall into three classes: eliminate the vortex shedding; suppress the troublesome acoustic modes; or destroy the coupling between the vortex shedding and the acoustics. The last is not likely to be a realistic strategy in practice. We have discussed the problem of suppressing acoustic modes in Sections 8.1–8.3. Thus, elimination of unwanted pressure oscillations in the present case comes down finally to avoiding the cause itself. Taking advantage of the (possible) natural evolution of large vortices shown in Figure 8.28 is likely not a practical measure because physical conditions that must prevail are probably not satisfied in a combustion chamber.

Hence, if vortex shedding is established as the cause of pressure oscillations in a combustor, there seems to be no alternative to destroying the cause. If the necessary re-design of the chamber is not practical, then the only solution may be restricting the performance of the chamber to conditions under which the unacceptable oscillations do not occur.