Chapter 6 – Knowledge of Human Behavior Under Stress and Sleep Deprivation will Enable You to Prevent Accidents and Death

by

Dr. C.J. Brooks
Survival Systems Ltd.
Dartmouth, Nova Scotia

INTRODUCTION

Estonia
"Some people were beyond reach [couldn't communicate with them] and did not react when other passengers tried to guide them, not even when they used force or shouted at them, some were just sitting in corners, incapable of doing anything." (Leach, 2005)

If you wish to understand why this happened, please read on.

I recently spoke at a very well attended OGP meeting of the marine and offshore oil industry in Cairo, Egypt. The principle topic was how to develop strategies to prevent accidents, injury, and death. In other words, how to make the work place a great deal safer. Yet, apart from myself and a colleague from Aberdeen, there were only a few other attendees that I met who had any knowledge of human engineering, human physiology or had an applied psychology background; all these disciplines being so important in analysing the causes of accidents and incidents [7, 8]. No one was aware of all the pioneering work done by Professor Reason on human error and Professor Leach on performance under stress [3, 4, 5]. The fact that struck me most was that these attendees were operators, regulators and human resource personnel.

Most of the decisions made at this meeting were designed to close the loop holes and prevent possible short cuts in the procedures that cause accidents. They added yet another layer of rules and regulations to an already highly regulated environment. This was in complete disregard as to how the human processes information under normal or stressful situations. The aviation industry was represented as well. They demonstrated that they had already made some progress with addressing the human factors issue and its relationship to accidents and incidents. In my opinion, the marine and offshore oil industries were way behind. I hope this paper starts to get you back on track.

The objective then is to persuade you to:

1) Understand the problem with shift work and examine your shift work policies and practices.
2) Introduce good human engineering practices into your operation.
3) Use human engineers in all aspects of your business from initial planning all the way through to full scale operations.
4) Use human engineers in all your accident / incident / near miss investigations, and pay attention to what they conclude and advise.
5) Identify good applied psychology and applied physiology scientists and occupational medicine physicians that can give you additional advice.
6) Teach teamwork in emergency procedures. When a problem occurs, there is too much information for a single human to analyse and react **correctly**. The O.I.M. of the rig, the pilot of a 777, and the Captain of a Cruise ship cannot deal with all the problems him/herself. A lot must be delegated and a bond of trust must be developed within the team.
7) Don't fire the guy who screwed up – it may not really be his/her fault, but an endemic problem of the system. Listen to him or her because this may be the only chance you have of learning about what really happened. If the work policy is to fire anyone who commits a slip or an error, you will never discover the root cause, and the problem will re-occur.

In February 2006, over 1,000 people died in the Al Salam Boccaccio '98 ferry accident in the Red Sea. Egypt's Minister of Transport vowed that 'whoever was responsible won't go unpunished whatever post they hold'. When I ask you the audience whether you think this a splendid idea, my bet is that the majority will agree. The objective of this paper is to politely suggest this may not be the best approach if you wish to prevent a repeat of such an accident!

What authority do I have to be so cavalier to suggest a different approach? First, as mentioned above, we now have superb scientific documentation by Reason and Leach to explain why people behave as they do in different normal and stressful situations. I will quote this excellent documentation freely throughout the presentation. Second, I have been a working physician, accident investigator, and scientist for 41 years now. Therefore, as one old master mariner said, "Brooks, you have walked the walk". I will just give you three typical occupational medicine nightmares that I unfortunately experienced on a regular basis:

First, I spent four years in two brand new Royal Navy nuclear submarines in the 1960s, and it amazed me to see how the reactor panel operators coped with the illogical way in which the knobs, dials and switches were all set up, and the rigmarole of actions they needed to carry out when the reactor scrammed. Not only that, but there were persistent steam leaks in the engine room which caused a temperature rise to 35°C and 100% relative humidity! Four hour watches were reduced to 1 hour. How we managed not to have an accident, I will never know! The basic problem was complete ignorance of how the human operates equipment and stubborn denial by Senior Management and marine architects that there was a problem.

Second, I was asked to consult on a new NATO Communication Centre. Once commissioned, the absenteeism rose dramatically and the number of staff who reported on sick parade also rose proportionally. The Admiral asked "How can this be! It's a brand new building!" Why? Very simple: no human engineer was consulted on how to design the interior of the building; staff were required to conduct 12-hour shifts; the seating was uncomfortable and unadjustable; the lighting and flicker from the fluorescent tubes was causing headaches; the CRT's were all placed in fixed positions and not adjustable either; the reflection on the screens from the flickering tubes was dreadful; and the noise from the crypto machines clattering away 24 hours a day was enough to drive anyone insane.

Third, when I moved to Canada I used to fly in the Sea King helicopter to conduct Search and Rescue missions. The Buaer lifejacket that I wore was outdated (introduced into the USN in 1946), and did not provide enough buoyancy to keep the nose and mouth out of the water if you were incapacitated. There had even been one accident where a pilot had been seriously injured due to the poor performance of the lifejacket. However, the Board of Inquiry dealt with all the machinery aspects of the aircraft accident, but as far as I could ascertain, had ignored the pure human side of the accident. Again, through ignorance or denial, they failed to ask why the pilot was injured due to the poor performance of the lifejacket. Fortunately, I was later able to design a new and improved lifejacket which replaced the old one, **mind you this took 8 years to achieve!**

So I have given you three examples from land, sea, and air where consultation with human engineers and physicians with occupational medical expertise ahead of time would have prevented absenteeism, chronic illness, unnecessary stress, injury accidents, very expensive refits and replacements, and worst of all death.

> Consultation with human engineers and occupational medicine physicians ahead of time will prevent absenteeism, chronic illness, unnecessary stress, injury, accidents, very expensive refits and replacements, and death.

In the next 45 minutes, I am going to briefly explain how humans *process* information in their brains under normal conditions, how humans *process* information under stressful conditions, and last, how humans *behave* under stressful conditions. To amplify on this you must buy and read three books: J.T. Reason's Human Error; J.T. Reason's Managing the Risks of Organizational Accidents; and J. Leach's Survival Psychology. These should be in the cabin of every ship's captain and O.I.M. in the office of every helicopter operations manager, and should be mandatory reading for all Human Resource Managers, Marine and Aviation accident investigators and all survival instructors.

HOW DO WE NORMALLY PROCESS INFORMATION?

The intention is not to make you into instant psychologists, but to explain not only how we manage to function very successfully in our whirlwind environment, but also explain our limitations. Once we expect people to operate outside their limitations, or design regular and emergency (survival) equipment that is not **very** easy to understand and operate particularly under stressful conditions, that is precisely when accidents, injuries, and death occur.

The Normal Reflex Arc

This is the fundamental automatic response that we all possess to protect us from extreme danger. When you put your hand on something extremely hot or cold, the temperature and pain receptors instantly sense this. They transmit the signal through a sensory afferent nerve to the spinal cord in the dorsal root ganglion. It is immediately transferred across the spinal cord by interneurons to the efferent motor nerve. Then the motor nerve sends the signal to the local muscle which produces a rapid contraction. This causes the hand to withdraw from the hot or cold item. The whole sequence of events occurs in a split second. Only after the reflex has occurred is a signal sent to the brain that says 'Wow! That was very hot or very cold or extremely painful.'

This explains why under extreme circumstances some people respond to the threat (correctly or incorrectly) hardly even knowing what they have done until after they have done it. The common expression used in the English language for this is the "knee jerk" reaction (Figure 6-1 below).

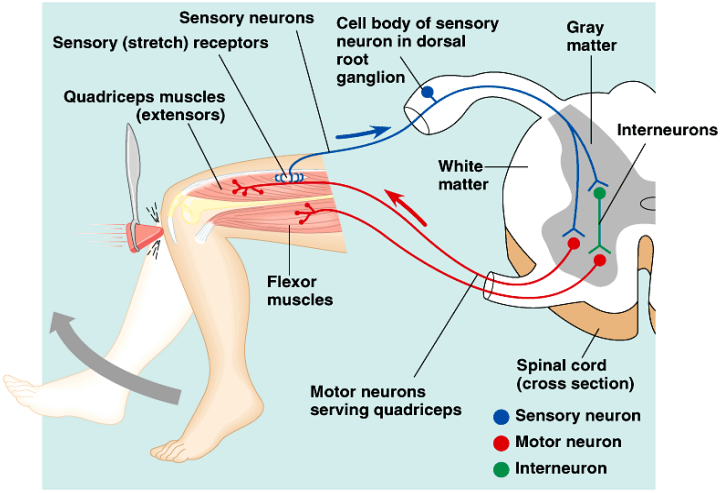

Copyright © Pearson Education, Inc., publishing as Benjamin Cummings.

Figure 6-1: The "Knee Jerk" Reaction (Courtesy of Pearson Education Inc.)

Normal Human Information Processing

The reflex arc has been inherited from the lower animal kingdom. As man developed, the capability of our brain also developed. What separates us off from other species is that we can process information now, rather than just rely on simple reflex arcs to cope with daily problems.

We have evolved so that all the sensations such as vision, hearing, taste, smell, hot, cold, vibration, pain and posture are constantly being fed into a sensory register or *input selector* of our brain by 'telephone lines'. Here the information is encoded and put into a central processing unit (*short-term* or *working memory*). What is most important to know is that **the number of 'telephone lines' to the central processing unit is very limited**, and for your operations you should consider it to be only one line. This makes the processing system a single channel analyser. This explains why people will swear that they did not hear an alarm sound when they were completely immersed in some other complex task, even if the alarm was very loud. They will be correct because their telephone line was busy processing the other information and could not process any more information. This is one of the primary reasons why under emergency conditions, no single person can deal with a complex problem on their own. In the usual annual round of cost cutting, the temptation is to remote many aspects of the operation to reduce staff. Beware of this, the level at which the alarms are set, may not leave the skeleton staff enough time to process the information, before the catastrophe.

> The human brain uses a sensory register to process all the information received by the sensory organs (eyes, ears, nose, skin, etc.) – but there is essentially only one telephone line to send this to the central processing unit, the short-term or working memory. Due to this limitation, the human can only process one complex task at a time. Therefore, vital information will not be processed if other colleagues do not share the task components. This is the prime reason for working as a team.

Returning to the Central Processing unit, the information is entered into the *short-term* or *working memory*. Here, it is compared in the thought decision making process section with other information and experiences which may already be in *long-term memory*. The parcels of information that are learned are then stored and available for comparison to any following information entered into working memory. These parcels of information are called schemas. However, if no schema is present, working memory alone is used, which is a very time consuming process, and has a limit on how much information it can hold and process in a given time. Then the schema is developed and a response is generated. This response is then stored in *long-term memory* for a more rapid future response. In a nutshell, as we grow up, each of these life experiences (benign and dangerous) are entered into our long-term memory as separate schema. Most important, if there is no rehearsal of these schemas between working and long-term memory, then the fine detail in the schema fades and it is not remembered for later use when it may be life-saving. That is why we do refresher training. This process of normal, non-stressful decision making takes about 0.1sec to happen. Remember this too, it is also very important. This illustrated human information processing chart in Figure 6-2 is quite complex, and for practical purposes and for teaching your staff how to understand what is happening, I have modified it and made this much simpler to understand. For the academics in the audience please forgive me.

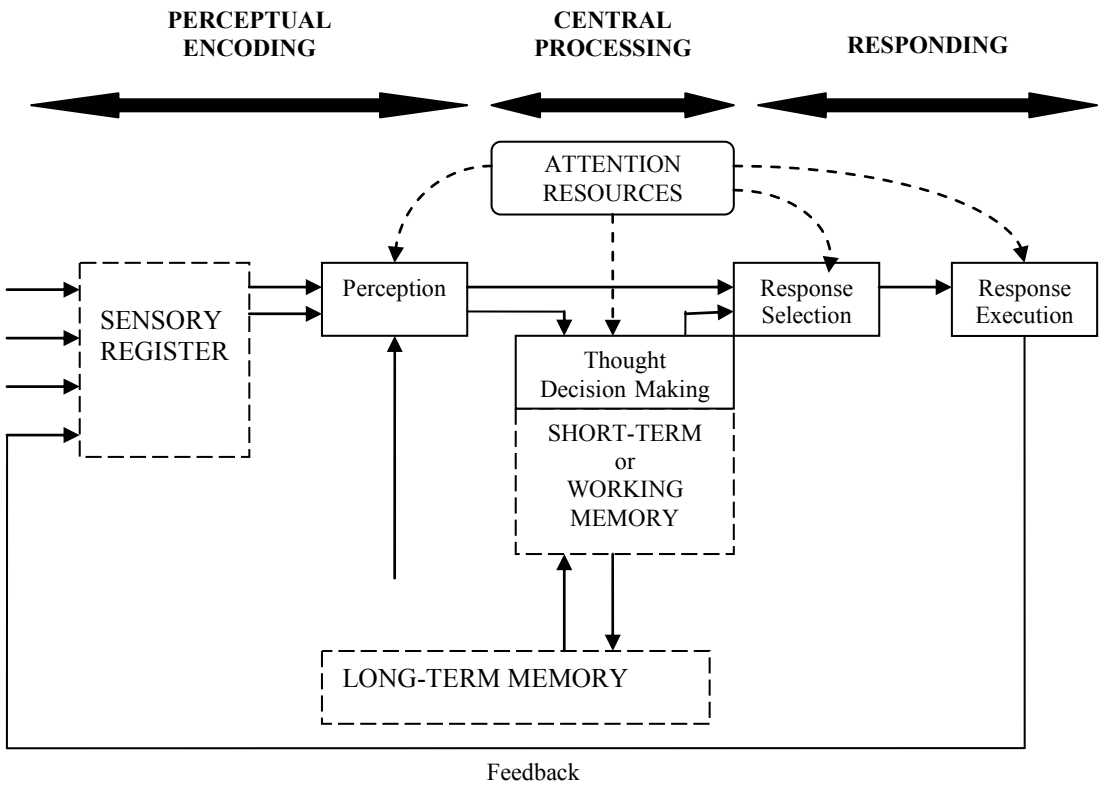

Figure 6-2: A Model of Human Information Processing (Adapted from Wickens, Lee, Liu and Becker 2004 [9]).

Every second of the day, information is entered into our short-term or working memory, compared to previous experience, stored in the long-term memory, and an appropriate response is made.

These parcels of information called schemas allow us to make rapid responses in approximately 0.1 seconds on all our daily life decisions (opening the front door, changing gear in the car, etc.).

Without repetition, these schemas fade from long-term memory, and this is the very reason for: a) developing as many schemas for emergency procedures as possible (repeated practical exercises); and b) to prevent the skills from fading out of long-term memory and needing to be relearned (which takes 100 times longer to process).

Simplified Human Processing Diagram

In Figure 6-3 you can see I have reduced the flow chart to an input selector, a single channel analyser, a short-term or working memory, a long-term memory, a rehearsal mechanism, and the response. I have also added the Supervisory Attentional System (SAS) (see next paragraph). This is basically all you need to know.

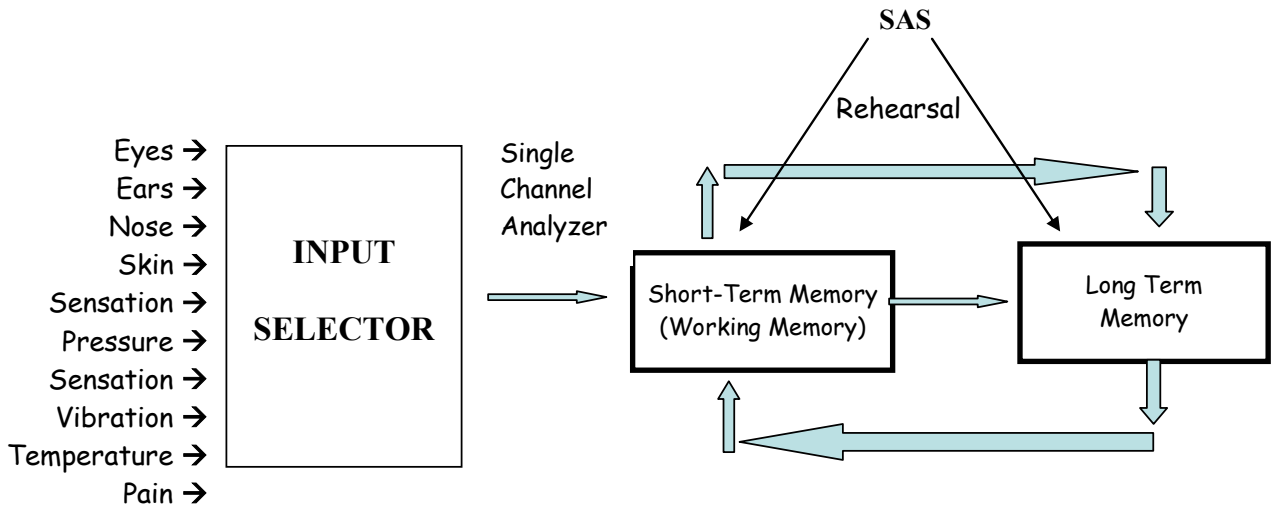

Figure 6-3: A Simple Diagram to Show How Human Information is Processed.

Control of Complex Unusual Situations that Don't Fit into Schemas Already Learned and Practiced

The control of complex tasks is done by the Supervisory Attentional System (SAS) in the cerebral cortex of the brain. Its functions are:

- Planning and decision making;
- Error correction and trouble shooting;
- Solving novel or poorly understood learned sequence of actions; and
- Solving problems in technically difficult or dangerous environments requiring the overcoming of a strong habitual response.

As you can see, this is precisely the system your brain uses in all your daily decision making, more than routine operations, on an oil rig, the bridge and engine room of a ship, and the cockpit of an aircraft. It is also in every other walk of life – doctors in the emergency room, etc. However, and this is the most important lesson to note: the SAS is very vulnerable to overload if events unfurl too quickly and it can be easily disabled. It is a very poor responder (which appears odd – one would think for such a critical system, it would be very quick); it takes over 100 times as long to process a problem compared to the normal system. Therefore, response times take about 8 – 10 seconds, which may not be fast enough when you are dealing with a serious fire, a ballast problem, an in-flight complex approach in poor weather, etc. [5, 7]

> The Supervisory Attentional System (SAS) takes care of all the critical decision making in complex situations. It is slow and takes 100 times longer to process information compared to information stored as normal schemas. It can be quickly saturated with information and disabled as a result. Hence, this is the most important reason to have people working as a team when a complex difficult and potentially dangerous situation occurs.

Human Behavior Under Stress

So now you know how the brain processes information. Next, you must understand how people behave when they are under stress. Stress effects performance of everyone, from workers on the shop floor all the way through to senior personnel managing the operation. The essential textbook that must be read by all of you is Professor John Leach's book called "Survival Psychology". [3]

WHY DO PEOPLE APPEAR TO BEHAVE SO ODDLY?

Can you explain the answers to these three questions?

Question 1: In the 1994 Estonia marine accident, why would people still be pestering the Purser's Office to exchange money at 01:00 when the ship had a 30° list and was obviously sinking in the Baltic Sea gale?

Question 2: In the King's Cross Tube Station Fire in November 1987, Judith Dingley saw the smoking escalator and tried to prevent people going down it: "I stood there with my arms stretched out like Jesus on the cross saying 'don't go up there, there is smoke.' But nobody stopped" [3]. Why do you think people did this?

Question 3: In the very rapid sinking of a tug in the Gulf of St Lawrence in mid Winter, why did two very experienced Master Mariners pace backwards and forwards from one wing of the bridge to the other and doing nothing as the water rose above their knees, and simply drown, whereas a much younger and less experienced deck hand standing right next to them quickly put on his survival suit and survived?

Leach uses an easy to follow dynamic model of an accident and describes the wide spectrum of behavior during each developing stage of the accident. This consists of 5 phases:

1) Pre-impact phase – threat and warning stage;
2) Impact phase;
3) Recoil phase;
4) Rescue phase; and
5) Post-trauma phase.

Armed with this information you will be able to very simply analyse exactly what happened in many national and international disasters, and most important in incidents and accidents in your own departments. Irrespective of the type of catastrophe or extreme predicament (i.e. earthquake, fire, shipwreck, aircraft accident), humans appear to follow the same pattern of responses.

PRE-IMPACT PHASE – THE THREAT

In this phase, even though there is a known threat, the usual behavior is inactivity, self-denial, a sense of immunity "it will never happen to me". These are all **very normal** responses to be expected. Why does it happen? Planning and preparation costs money and uses human resources – there is always something more important to spend the money on, it is also inconvenient and generally the population is apathetic about supporting the project when the threat seems so far away (just think about examples like nuclear war, the Aberfan coal tip accident, living under a volcano, the chronic problem of deaths from failures of davits in TEMPSC launches). Some people even think that planning for a disaster may even precipitate one! – "Don't even think about it!"

Here are two perfect examples of the same threat, yet very little action has been taken to resolve the problem. Are you prepared for it and are you trained appropriately?

CHIRP Report No.200140

"During a routine drill the brake lever arm dropped to its stops and there was no braking effect whatsoever. The boat ran down to the water and was dragged alongside at 16 knots. The painter was ripped free, the forward falls torn away, and the boat was struck by the propeller…This is another unfortunate case of the failure of a lifesaving device now more noted for mechanical problems, injuries and deaths, rather than lifesaving."
(Safety at Sea May 2006)

… and in the July edition of Safety at Sea:

Fatal Accident at Malta Freeport

"One crewman died and two others were injured during a lifeboat aboard the general cargo ship *Bluemarlin* at Malta's Freeport on 16 June, just a few hours after the Madeira-registered ship had arrived at the port. The three men were hurt when a lifeboat fell from its supports into the sea."
(Safety at Sea July 2006)

Attention has been paid to the self denial problem, and in the June 2007 Safety at Sea Journal, 15 new ferries are going to be commissioned be Indonesia as a result of the loss of confidence in their ferry system.

Indonesia Ferry Accident

"480 fatalities occurred in June 2000 off North Maluku; more than 20 in the same area the following year; about 150 feared dead on the sinking of the *Digul* in July 2005; another loss in February 2006 near Kupang; at least 350 fatalities in the Senopati Nusantara disaster on 30 December last year; and, more than 50 killed on *Levina I* on 22 February 2007."
(Safety at Sea June 2007)

PROFESSOR REASON'S SWISS CHEESE MODEL OF AN ACCIDENT

I am going to introduce Professor Reason's Swiss Cheese model to you [7]. This interfaces perfectly with Professor Leach's model of an accident at the pre-impact phase. This concept is very useful for identifying where the breakdown in equipment or supervision occurs. For simplicity I am going to use it to demonstrate a failure in supervision that can occur at different levels of supervision from the shop floor all the way up to the

senior management. Each level is represented as a layer of Swiss Cheese (Figure 6-4). These layers are in constant lateral motion. Theoretically, each layer of supervision can stop an unsafe act, and ultimately prevent an accident. If the act is not caught at the first layer of the cheese and passes through a hole, then theoretically it will be caught in the next layer – but, if not, then it will be caught by the next layer, etc. However, if it is not caught by any layer and the series of holes all line up in each of the layers, then the accident happens.

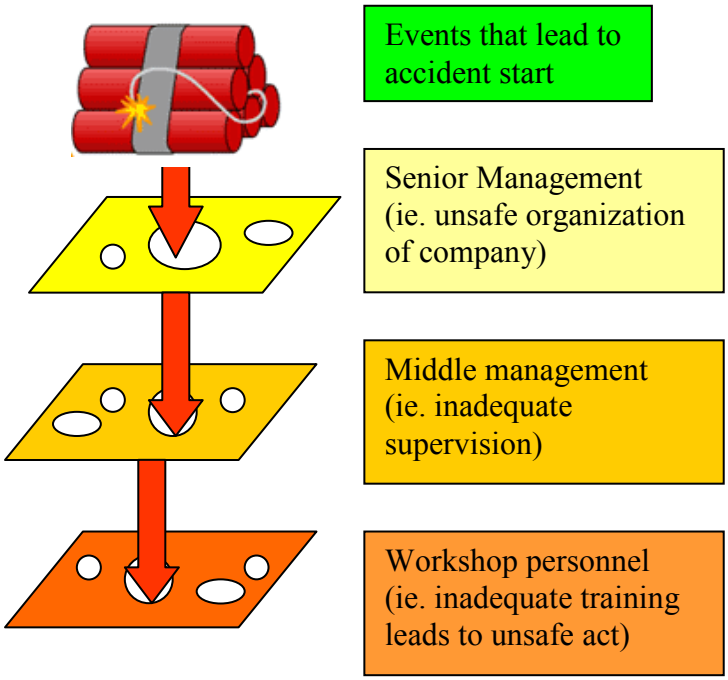

Figure 6-4: Modified Version of Reason's Swiss Cheese Model (after Reason, 2005).

The Herald of the Free Enterprise is a typical accident where all the holes unfortunately lined up and approximately 200 passengers drowned. There was a known threat – sailing with the bow cap open. However, the day the accident occurred, there was no watch-keeper at the bow cap, there was great urgency to sail to meet the tide, and the bow cap was open (working level), middle management (master mariners on the bridge) wanted additional warnings and senior management thought the watch-keeper at the bow cap was adequate. All three layers of the Swiss Cheese had their holes lined up and the accident happened!

> "Townsend Car Ferries Ltd are at fault at all levels, from the Board of Directors down to the junior superintendents. From top to bottom, the body corporate was affected by the disease of sloppiness."
> **Mr. Justice Sheen (24 July 1987).**

Li and Harris [6] derived another human factors analysis model from Reason's Swiss Cheese model. It is also a useful tool to guide accident investigations and develop accident prevention strategies (Figure 6-5).

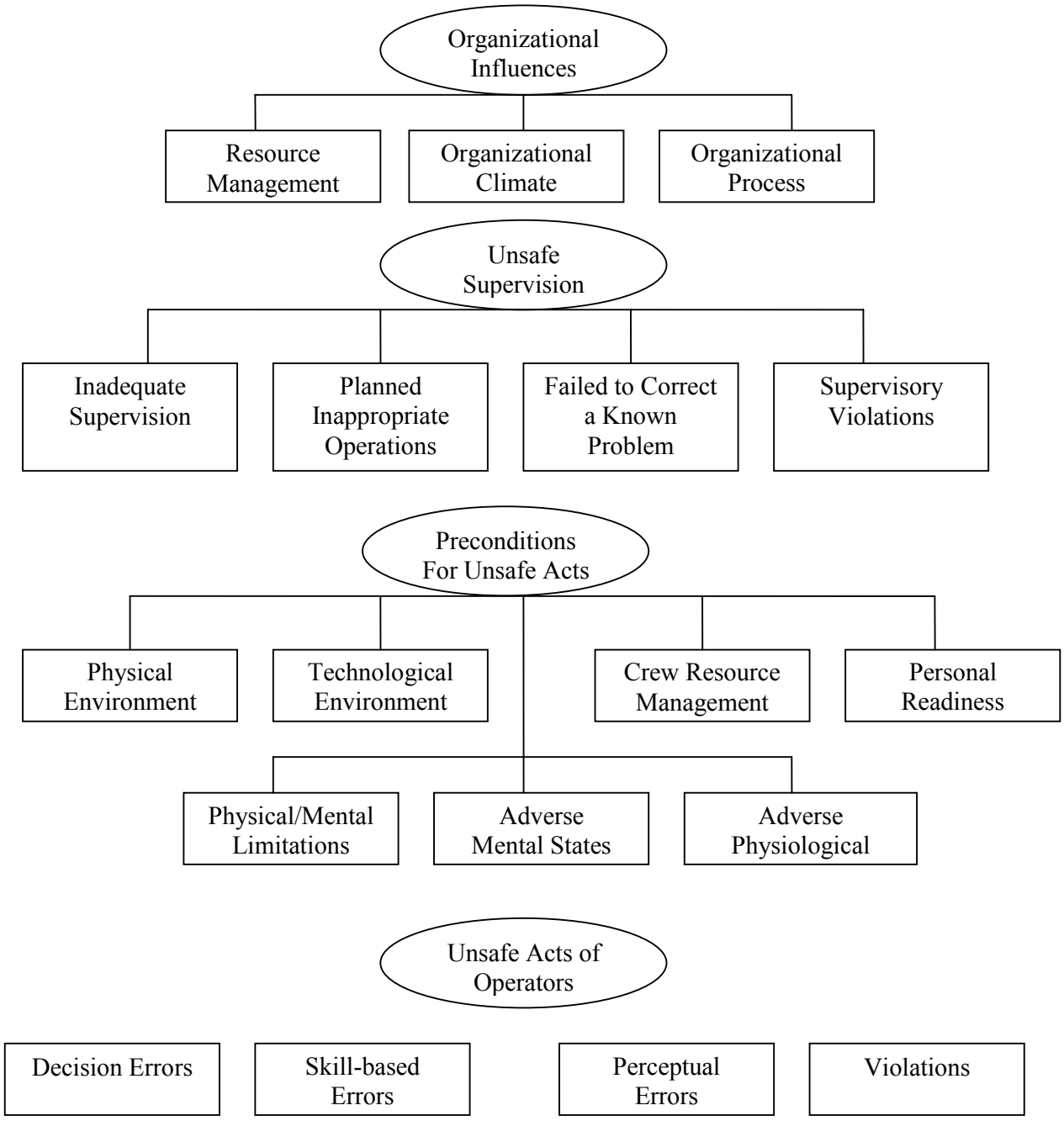

Figure 6-5: The Human Factors Analysis and Classification System (after Li, W., Harris, D. 2006 [6]).

PRE-IMPACT PHASE – THE WARNING

Reverting back to Leach's model, when the warning occurs the threat appears real. Behavior ranges from hopeless apathy (Estonia), over-activity (sinking tug in the St. Lawrence river), self-denial (Estonia), and

ignoring warnings (King's Cross Fire). The lesson to learn here is that warnings are no good without information. You all know exactly what happens when there is a false alarm with the fire alarm. Basically no one does anything in a hurry. This is precisely what happened as the author was writing this paper in the hotel in Stavanger, Norway. The majority of rooms were full of English speaking oil workers waiting to go offshore the following morning for a crew change. The announcement was in Norwegian and not a person responded! Fortunately it was a false alarm! So **when you are in charge you must truthfully let the people know what is happening**. It is no good saying the flight is delayed. People are fed up with this, they need to know why and for how long. Then they too can plan and prepare.

PERIOD OF IMPACT

Irrespective of race, creed, sex, and level of training, each one of you will perform under one of three categories as illustrated in the curve distribution below in Figure 6-6.

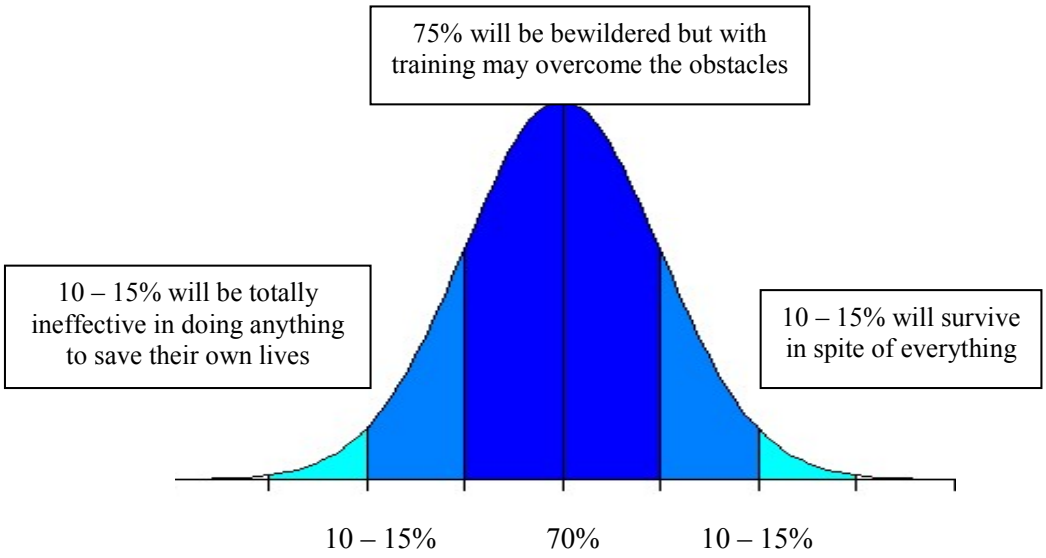

Figure 6-6: Bell Curve Distribution for Individual Reaction Due to Stress at the Period of Impact.

Under extreme stress, 10 – 15% of the population will exhibit behaviors that impair their ability in making a successful escape, such as paralyzing anxiety, confusion, and screaming [4]. Another 10 – 15% will be able to assess the situation and gather their thoughts quickly. They will succeed in formulating good decisions, and execute their plan of action well. The remaining 75% of the population will be bewildered and stunned, but with good training can follow the correct procedures to make a successful escape from whatever hazard confronts them. Their actions are mostly automatic in nature, and they will function more slowly as a result of the shock and amazement of the present situation.

Under stress at the time of the accident (period of recoil):

- 10 – 15% will survive in spite of everything
- 75% will be bewildered but with training may overcome the obstacles
- 10 – 15% will be totally ineffective in doing anything to save their own lives

It is very important to understand this model. Because no one knows how **YOU** or anyone else will behave under these stressful situations until it really happens. You must be prepared to accept that some of your staff will indeed be rendered totally useless, and it may indeed be **you**.

Regular training certainly helps. This develops the appropriate schemas so that the brain does not need a lot of time to process complex tasks – the closely-matched schema is already in long-term memory and therefore the decision-making process does not have to rely on the slow and time consuming working-memory to come up with a new schema. Remember, the Supervisory Attentional System can rapidly be overwhelmed in a stressful situation, and it bears repeating that it takes 100 times longer to process the information.

THE PERIOD OF RECOIL

This occurs after the danger has been removed. Several types of behavior can be expected ranging from hyperactivity, an attitude of dependency, a feeling of total disbelief that the accident has occurred, anger, guilt, and complaints about the most trivial thing. One fact that was noted in the pre-impact phase is that people are still looking for information, especially those in the bewildered category. They tend to follow anyone who claims to have some authority (a policeman, an engineer, a clergyman, etc.) – but the people who claim to have some authority may be in fact providing irrational, irresponsible advice which can lead to the demise of those who follow them. In one marine accident, the Nurse suggested that no one could swim with their clothes on, so she told them to undress before abandoning ship. The majority of the bewildered survivors died from hypothermia. They didn't have the extra insulation that clothing would have provided!

PERIOD OF POST-TRAUMA

The scope of this problem is too extensive to be discussed within the time allocated to this lecture. This is the time when the victims' lives have to be rebuilt.

However, it is important to understand that when you interview survivors after the accident, both the time and visual observations of the event can be seriously distorted during a highly stressful life threatening escape. The first testimony is the most reliable. After this, repeat questioning may extract inconsistencies and major changes in evidence. The brain tries to fill in the evidence after the fact in an attempt to rationalize the whole event.

SHIFT WORK, SLEEP PATTERNS, AND SLEEP DEFICIT

The majority of humans need 8 hours sleep a night. Human's sleep pattern, or circadian rhythm, falls into two types – larks and owls. Larks wake up early, and are most productive in the mornings until noon. After that, it tails off. They generally like to be in bed early and suffer badly from jet lag. Owls wake up later and their productivity peaks in the afternoon and early evening. They can stay up all night, but have a hard time getting up in the morning.

Neither cope well with shift work, especially after the age of 40 when humans sleep patterns tend to deteriorate. Just look at the average age of your staff and think about this when you are planning your operations.

So in order to avoid accidents and incidents, you must know your people and understand their sleeping habits, e.g. it is hopeless to keep asking one of your brilliant engineers to do a task every morning (when it can be

done at any time in the day) if he/she is an owl! Don't decide to do any major exercise or engineering project in the middle of the night when everyone's natural performance is at its lowest **unless it is absolutely necessary**. If you do proceed, get extra help.

There was an extensive review on the health and performance of shift workers in the Occupational Medicine Journal in 2003, which is recommended to everyone. Two very significant papers concluded:

> "Both safety and productivity are reduced at night. This reduction probably reflects on a number of underlying factors, including impaired health, a disturbed social life, shortened and disturbed sleep, and disrupted circadian rhythms." (Folkard and Tucker, 2003, [2])
>
> "Irregular work hours seem to exert strong, acute effects on sleep and alertness in relation to night and morning work. The effects seem, however, to linger and also affect days off. The level of the disturbance is similar to that seen in clinical insomnia, and may be responsible for considerable human and economic costs due to fatigue related accidents and reduced productivity." (Akerstedt, 2003, [1])

THE NECESSITY TO HAVE A GOOD HUMAN ENGINEER IN ALL YOUR OPERATIONS

So far I have described how and why the brain is not very good at coping with complex problems when it is stressed out, tired, or operating out of its normal circadian rhythm. Therefore, it is imperative that all emergency equipment and systems should be simple to understand and easy to operate in all adverse conditions. I am just going to run through some slides to provide some good examples that have happened. I have not had to search very long and hard for them! It will become very obvious that the engineers have never considered the human in the design equation. You must use human engineers in all your projects from initial design right through to the full operation. There are also some very good occupational medicine physicians, applied psychologists, and physiologists who can give you additional help. It will save you millions of dollars in refit bills and damages, both to the human and equipment. Most importantly, it will decrease the number of injuries and the unnecessary loss of life.

Strong messages to take back to the rig, the ship, the squadron and staff in head quarters:

- Regular training is essential to develop as many survival schema as possible.
- The brain is not good at coping in emergencies, it can basically only analyse one complex problem at a time and it is **slow**.
- Reducing staff may in the short term save money, but in the long term costs a lot more. Remote systems puts more stress on the remaining crew which leads to accidents because they: a) can't process the information fast enough; or b) take dangerous short cuts to do the job.
- Shift work is a necessary evil. There is a penalty to be paid in both safety and productivity at night.
- Don't plan to conduct complex tasks, both mental and physical, in the middle of the night. If the task is vital, get extra help.

- Don't do complex tasks **immediately** after a crew change when workers may be jet lagged, sea sick, hung-over, etc.
- A well trained team in which authority is delegated and there is complete trust is essential both to prevent and cope with accidents.
- You are all Alpha males or females – there is no shame however in delegating authority when you are not well, over-tasked, or stressed out.
- In a major incident/accident, 15% of people in spite of training, race, creed, sex, age, etc., will be useless and you will not know who that is until the crisis occurs. Be prepared for this – it will happen.
- Don't fire the guy who makes the mistake and "apparently" precipitated the accident. He/she likely holds the key to the true root cause of the problem.
- Use more human engineers, applied psychologists, physiologists and occupational medicine physicians in your business, right from planning up to operations. It will save you millions of dollars in refit bills and damages, both to the human and equipment. Most importantly, it will cut down on the number of injuries and unnecessary loss of life. It will make your safety record the envy of your competition and your shareholders.

REFERENCES

[1] Akerstedt, T. (2003). Shiftwork and disturbed sleep/wakefulness. *Occupational Medicine*, *53:* 89-94.

[2] Folkard, S. and Tucker, P. (2003). Shift work, safety and productivity. *Occupational Medicine*, *53*: 95-101.

[3] Leach, J. (1994). *Survival Psychology.* (2nd ed.). New York University Press. ISBN 0-81475-090-7.

[4] Leach, J. (2004). Why people 'freeze' in an emergency: temporal and cognitive constraints on survival responses. *Aviation, Space & Environmental Medicine, 75*: 539-542.

[5] Leach, J. (2005). Cognitive paralysis in an emergency: the role of the supervisory attentional system. *Aviation, Space & Environmental Medicine, 76*: 134-136.

[6] Li, W. and Harris, D. (2006). Pilot error and its relationship with Higher Organizational Levels: HFACS Analysis of 523 Accidents. *Aviation, Space, and Environmental Medicine, 77:* 1056-61.

[7] Reason, J.T. (1990). Human Error. Cambridge: Cambridge University Press. ISBN 0-521-31419-4.

[8] Reason. J.T. (2005). Managing the Risks of Organizational Accidents. Ashgate Publishing Company. ISBN: 1-84014-104-2.

[9] Wickens, C.D., Lee, J.D., Liu, Y. and Becker, S.E. (2004). An Introduction to Human Factors and Engineering. (2nd ed.). Upper Saddle River, NJ: Pearson Education Inc.