Annex D – GAS TURBINE ENGINE SIMULATIONS FOR EDUCATIONAL PURPOSES

Gas turbine theory is being well documented nowadays. The basic principles of gas turbine and aircraft engines are clearly described in many excellent books. Two books from the AIAA Education Series edited by Gordon C. Oates are excellent, introducing the basic gas dynamics for gas turbine components and their performance calculation as well as design methods. Cohen, Rogers and Saravanamuttoo's book is one of the best books for introducing gas turbine theory and many universities use it as a reference book during lectures.

Recently, Walsh and Fletcher from Rolls Royce wrote a book of gas turbine performance, which has an excellent description of gas turbine performance theory from a gas turbine manufacturer's viewpoint. Gas turbine engines consist of intakes, compressors, fans, turbines, ducts, combustor, mixer, afterburner, heat exchangers and nozzles. Gas turbine performance means *Design Point Performance, Off-Design Performance* and *Transient Performance*. Design Point Performance is central to the engine concept design process. Off-Design Performance is the steady state performance of gas turbine as its operational condition is changed. Transient Performance deals with the operating regime, where engine performance parameters are changing with time.

Gas turbine engine simulations can be useful tools for teaching engineering students while in an academic situation or for on-the-job training for engineers within industry. Many of the models discussed in ***Chapter 5*** can be and are used in educational settings. Many textbooks, such as those written by Jack Mattingly, supply software (e.g. ONX, OFFX) for use in propulsion classes. Both educational institutions and industry use GASTURB, the cycle model developed by Kurkze, for in-house training. An extensive listing and description of the available models are provided in ***Chapter 5***.

D.1 INTRODUCTION TO TRANSIENT MODELING

This is a real example based on current practice in an engine company. The purpose of this section is to introduce the student to the following concepts:

- General form of a dynamic model;
- Dynamic and steady-state terms within a dynamic model;
- Initialization of a dynamic model;
- Dynamic simulation;
- Explicit, implicit and trapezoidal integration;
- Linear state-space representation of a dynamic model; and
- Linearization of dynamic model.

D.1.1 Audience

This education is aimed at those who have some experience of steady-state performance synthesis (and may have 'black-box' dynamic modeling experience), who want to understand some of the related issues. This particular module is part of a series of tutorials covering the techniques used in interfacing control-systems and engine models.

D.1.2 Format

The module uses a *very simple* engine model – hardly credible as a model itself but featuring clearly identifiable elements: input, output, state and state-derivative i/o (handled as vectors by the modeling system):

- A dynamic equation for shaft speed;
- A basic fuelling characteristic (fuel flow for a speed); and
- Quasi steady-state 'characteristics' (output parameters as a function of speed and overfueling).

The model can be set up easily in any dynamic modeling system, e.g. MATRIXx. The student is encouraged to do this rather than pick up the one already supplied. **Figure D.1** shows the model used in the exercise.

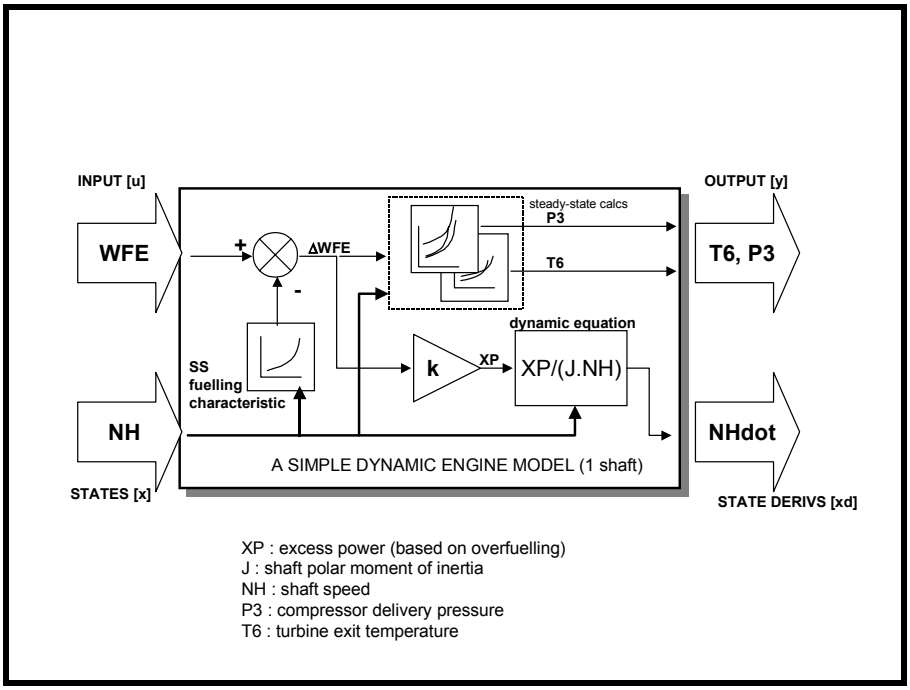

Figure D.1: The Exercise Model.

The model exhibits standard dynamic form and the problems of initialization are clear. In order to generate a steady-state solution for a specified value of fuel (WFE), a corresponding value of shaft-speed (NH) must be found. This is the main issue of initialization, which can be approached in different ways. The model can be set up in two ways:

- First Method: With arbitrary values of the state and be allowed to settle over time.
- Second Method: The implicit form of Euler's method is often used in full dynamic cycle-match engine models.

An external iteration routine can be used to determine the value of NH (at the specified WFE), for which the state derivative (NHdot) = 0 (within tolerance). This is the principle employed by the 'trimming' tools in some modeling packages.

Simulation (running the model to a specified trace of input vs. time) requires the numerical integration of state-derivatives. The clearest explanation of this process uses Euler's explicit method, where the value of shaft speed for the next timestep is predicted from the derivative obtained at the current timestep.

$$x_{(t+\Delta t)} = x_t + \left.\frac{dx}{dt}\right|_t \cdot \Delta t$$

This integration method may be viewed as over-simplistic for many gas-turbine systems. However, it is the principle being explored here rather than the accuracy or stability of a particular method.

The student is encouraged to run the model and observe the effects of varying the simulation timestep. The results can be compared with the model run using a more advanced explicit integration methods such as Runge-Kutta 4th order.

For control-system design, the model is used to generate the linear representation of the engine at a particular 'set points'. From examination of the model, it can be appreciated that a set of partial derivatives can be obtained by parametric perturbation of inputs and states. Again, the student is encouraged to use the automatic linearization function within the modeling environment to generate the linear engine model, which can then be simulated and compared with the non-linear version.

The implicit form of Euler's method is often used in *full* dynamic cycle-match engine models.

$$x_t = x_{(t-\Delta t)} + \left.\frac{dx}{dt}\right|_t \cdot \Delta t$$

The principles of implicit integration can be explored here at the simplest level. For this, the student must construct an outer iteration loop as shown in **Figure D.2**. Here the value of NH at t is varied until the two different derivations of Nh_{dot} are numerically equal.

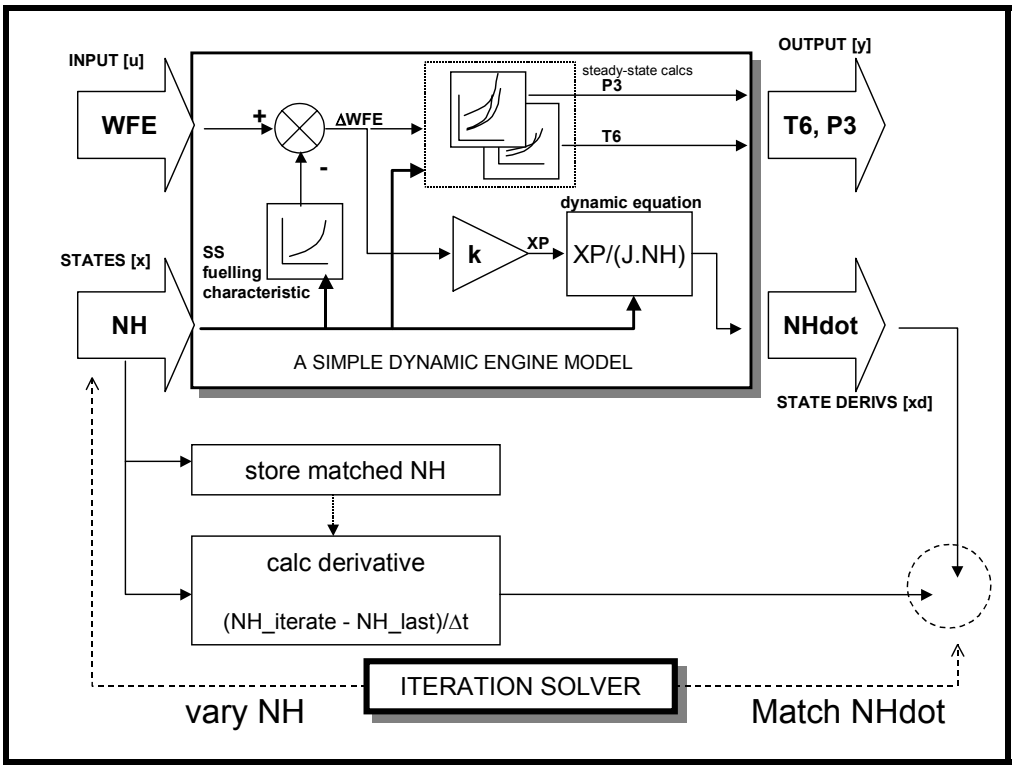

Figure D.2: The Exercise Model, with Implicit Integration Added.

As with the explicit implementation, the student is encouraged to run the model with various different timesteps and compare the behavior. It should be seen that the implicit approach is more stable than the explicit approach. The trapezoidal integration concept can be introduced at this point, which can be seen as being essentially a hybrid of both explicit and implicit methods.

D.1.3 Value

Once these principles are understood at the simplest level, it is much easier to see how they are implemented in a more complex modeling system. In such cases, the implementation is often obscure and tied closely to the advanced thermodynamic calculations employed. Also, iteration is often used in the steady-state elements of the model, and its specific role for implicit integration can be difficult to identify.

It should become clear that iteration and integration are purely means to an end and are not a real part of the engine model. Ideally, these processes are kept transparent to the user. However, it is often found that iteration in particular is an impenetrable subject, and a simple treatment such as this can be of value in explaining the operation of the more complex multi-variable solvers needed for 'proper' engine models.

The exercise also serves as a hands-on introduction to the modeling tool – taking in formulation of the model, population with data, use of associated tools (linearization and trimming) and data visualization. The student works from an intranet-based set of instructions.

D.2 INTRODUCTION TO GAS TURBINE CYCLES

This is a real example based on current practice in an engine company. The purpose of this section is to introduce the thermodynamic interactions and dependencies within a gas turbine engine.

D.2.1 Audience

This education is aimed at the new-start in the performance discipline, although it can be used as refresher material for those with more experience. It can also be used at a more basic level, for students aged around 17 – 18 who are considering aeronautical engineering courses at university. Students such as these usually pass through industry on specially arranged work-experience periods. Experience has shown that the same basic learning material can be used for each group of learners – the difference is in the depth of discussion which is a fundamental part of the education.

The following issues are covered:

- Engine design point performance;
- Off-design performance;
- Ratings; and
- Transients.

D.2.2 Format

There are three training modules.

D.2.2.1 Module #1: Hand Calculation

This exercise enables the design point performance of a simple single-spool engine, based on an existing engine, to be determined solely with the use of 'hand calculations'. The basic principles of the thermodynamic calculations are demonstrated using engine design point data.

The engine design point performance calculations use standard gas property charts where necessary. The compression and combustion calculations are also performed using the standard methods employed in the corporate engine modeling system, by hand, without the use of charts, replicating the methods used on the computer. Solutions are included for both exercises while a computer program is used to obtain a solution for comparison purposes.

D.2.2.2 Module #2: Design Point Calculation

This module uses a PC-based program to explore the parameters that influence the functional definition of civil and military engines. The input and output of the program are relatively non-complex and so facilitate the learning process rather than requiring much effort to be put into the means of driving the model.

The module addresses the design of a two spool (unmixed and mixed) turbofan. The following is an extract from the electronic module notes.

Objectives:

- To investigate the effects of changing the design Stator Outlet Temperature (SOT) and design Overall Pressure Ratio (OPR) on Specific Fuel Consumption (SFC), Specific Thrust and engine mechanical configuration for a two spool unmixed turbofan engine.
- To investigate the effects of changing design Fan pressure ratio on SFC for a range of engine bypass ratios.
- To investigate the effect of changing the design Stator Outlet Temperature (SOT) on By-Pass Ratio (BPR) and Specific Thrust for a range of design Fan Pressure Ratios (FPR) on a two-spool mixed turbofan engine.

These results will indicate the reasons for the choice of military and civil turbofan engine functional designs.

A PC-based computer program will be used to perform the calculations. The software also produces a schematic of the engine at a specified technology level (a program input expressed as an in-service date). This is a valuable visualization of the physical manifestation of cycle thermodynamics. The student is given the information that allows him to generate and plot (electronically) various fundamental parameters for various different cycles. Questions are set and discussed later with an experienced engineer.

D.2.2.3 Module #3: Off-Design Calculation

Design point studies as covered above enable optimum component and engine design parameters (e.g. bypass ratio and SOT) to be established. However, in order to calculate the steady state and transient performance of a gas turbine engine over a range of operating powers and ambient conditions, it is necessary to consider the interaction of all the components in an engine. The off-design or part-load performance calculations are necessary to ensure that the engine is capable of operating throughout its flight envelope and power range in a safe, stable and efficient manner. The exercise uses a proprietary PC-based cycle synthesis program to examine the off-design performance issues of a 2-spool mixed turbofan.

The following is an extract from the electronic module notes.

Objectives:

- To investigate the effects of two engine rating methods, fixed Stator Outlet Temperature (SOT) and fixed HP compressor aerodynamic speed ($NH/\sqrt{T}$) on performance parameters such as net thrust (FN), over a range of ambient temperatures at sea level static.

- Investigate the effects of fixing the SOT and HPC aerodynamic speed on performance parameters over a range of Mach numbers at sea level, ISA.
- Produce HPC and fan-operating lines (i.e. flow function vs. pressure ratio). Assess the effect of HP turbine and HP compressor deterioration on the engine.
- Investigate transient performance effects.

As before, questions are set throughout the exercise and are followed up in the discussion phase. With all of these modules, use of the computer could have been avoided. However, the hands-on experience (the generation of the data) is considered valuable. The figures could be merely supplied and subsequently discussed. However, the student feels no *ownership* of the data in this case.

D.2.2.4 Value

Objective 1 from module #2 leads the student to generate several figures, depicting the relationships between various cycle parameters. The following figure is such an example and is generated by synthesizing cycles at various values of Stator Outlet Temperature, bypass ratio, fan and HPC pressure ratio.

Figure D.3 illustrates the following:

- Minimum SFC is obtained with high overall pressure ratio (OPR);
- Maximum specific thrust is obtained at high SOT and moderate OPR; and
- Maximum thrust and minimum SFC are mutually exclusive.

Thus, the discussion leads into the compromises required in cycle design – especially at early stages.

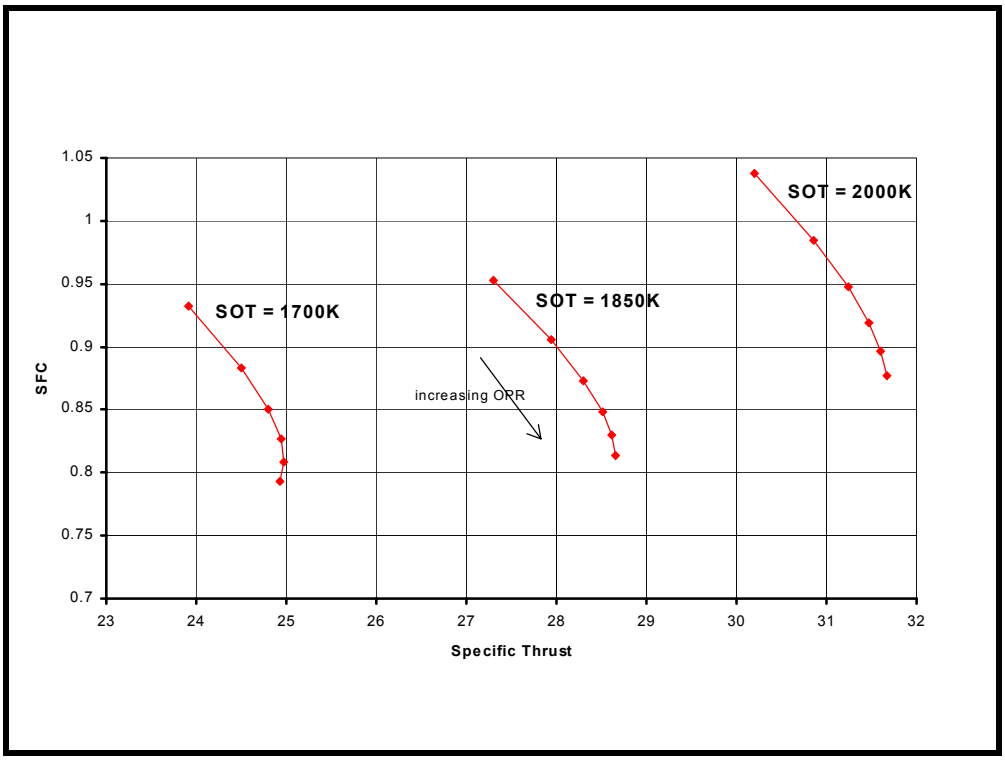

Figure D.3: Results from Module #2.

For the work-experience student, the three structured exercises lead into a further case study or mini-project concerning the selection of a replacement powerplant for the Concorde SST. A datum model of the existing powerplant is supplied which can be run using the packages used in the earlier modules.

The case study aims to explore the basic facets of aeronautical engineering *viz.* technical knowledge, modeling, teamwork, compromise, assumption, simplification (where appropriate), research, assessment of options, technical review, presentation of ideas, requirements management, project management, etc.

Objectives:

- Reduce operating costs of supersonic transport aircraft by modifications to existing engine only.
- Further reduce operating costs by selecting new powerplant.
- Add an extra constraint: minimize noise at take-off (development and retrofitting costs may be ignored).
- Consider the implications (fuel vs. passengers) for transpacific SST capability.

The students are given various data pertaining to the aircraft and the London to New-York flight. The Breguet range equation and other simplified relationships are also supplied. The problem is fairly unconstrained which can encourage the student to think *out-of-the-box* (e.g. consider variable cycle solutions – albeit at a very simple, conceptual level).

The students, usually operating in a small group of three or four, inevitably require some guidance on approaching the problem. However, with help they emerge from the experience with an appreciation of the preliminary design process, and of the difficulties inherent with providing large-scale supersonic transport. Perhaps most importantly, it brings the foundation modules to life, and provides a focus for the lessons learnt previously.

D.3 BIBLIOGRAPHY

Stricker, J.M., “The Gas Turbine Engine Conceptual Design Process – An Integrated Approach”, Design Principles and Methods for Aircraft Gas Turbine Engines, RTO-MP-8, February 1999.

Schaffler, A. and Lauer, W., “Design of a New Fighter Engine – The Dream in an Engine Man’s Life”, Design Principles and Methods for Aircraft Gas Turbine Engines, RTO-MP-8, February 1999.

Khalid, S.J., “Role of Dynamic Simulation in Fighter Engine Design and Development”, Journal of Propulsion and Power, Vol. 8, No. 1, January-February 1992, pp. 219-226.

Horobin, M., “Cycle-Match Models Used in Functional Engine Design – An Overview”, Design Principles and Methods for Aircraft Gas Turbine Engines, RTO-MP-8, February 1999.

Kurkze, J., “Gas Turbine Cycle Design Methodology: A Comparison of Parameter Variation with Numerical Optimization”, Journal of Engineering for Gas Turbine and Power, Vol. 121, January 1999, pp. 6-11.