Chapter 4 – DISTRIBUTED CONTROL ARCHITECTURE FOR GAS TURBINE ENGINE

by

Dennis Culley and Sanjay Garg (NASA Glenn Research Center)

ABSTRACT

The transformation of engine control systems from centralized to distributed architecture is both necessary and enabling for future aeropropulsion applications. The continued growth of adaptive control applications and the trend to smaller, light weight cores is a counter influence on the weight and volume of control system hardware. A distributed engine control system using high temperature electronics and open systems communications will reverse the growing trend of control system weight ratio to total engine weight and also be a major factor in decreasing overall cost of ownership for aeropropulsion systems. The implementation of distributed engine control is not without significant challenges. There are the needs for high temperature electronics, development of simple, robust communications, and power supply for the on-board electronics.

4.1 INTRODUCTION

Historically turbine engine performance has largely been determined by aero-mechanical innovations. Control systems, although critical to engine operation, have been designed to implement engine functionality rather than be a driving force behind their performance. This is a result of the natural incremental progression of technology which has seen controls evolve from complex mechanisms to the present day Full Authority Digital Engine Control (FADEC). In contrast, the future of enhanced engine performance is generally seen as a highly multidisciplinary endeavor. Advances in materials and design and an increasing reliance on adaptive control will form the basis of improvements in thrust-to-weight ratio and SFC (Specific Fuel Consumption) as well as reduction in environmental concerns like noise and emissions.

As various engine technologies are implemented, there will be additional but not unforeseen pressure on control system design to meet new challenges. In current production engines, controls and accessories (C&A) account for approximately 15 to 20% of total engine weight, an equivalent percentage of acquisition cost, and are a major source of unscheduled maintenance. With the advent of new technologies and all else being equal, C&A will increase its footprint in all three metrics. An example of engine mounted C&A is shown in Figure 4.1.

Figure 4.1: Engine Controls and Accessories Comprise a Substantial Portion of Total Engine Weight as Shown in this View of an F414 Engine.

The fundamental response to engine control system design must not be an incremental change but a sea change in system architecture which leverages the substantial gains observed in the electronics and information processing technology industries outside of aeronautics. Moving from centralized engine control architecture to a distributed architecture will be both necessary and enabling for future aero engine design.

4.2 STATE OF THE ART ENGINE CONTROL ARCHITECTURE

Presently, engine control system architecture is based on a centralized design in which discrete sensors and effectors are directly wired to an engine-mounted electronics package. This avionics unit, often known as the FADEC, contains all the necessary circuitry to properly interface with engine control devices as well as cockpit command and data communications. The design of a centralized engine control system is primarily based on the single overriding concern of minimal control system weight because of its effect on overall vehicle performance. Much of the design is based on legacy, the result of incremental improvement over many years. This constraint severely limits the design choices for avionics engineers. The centralized engine control architecture is shown in Figure 4.2.

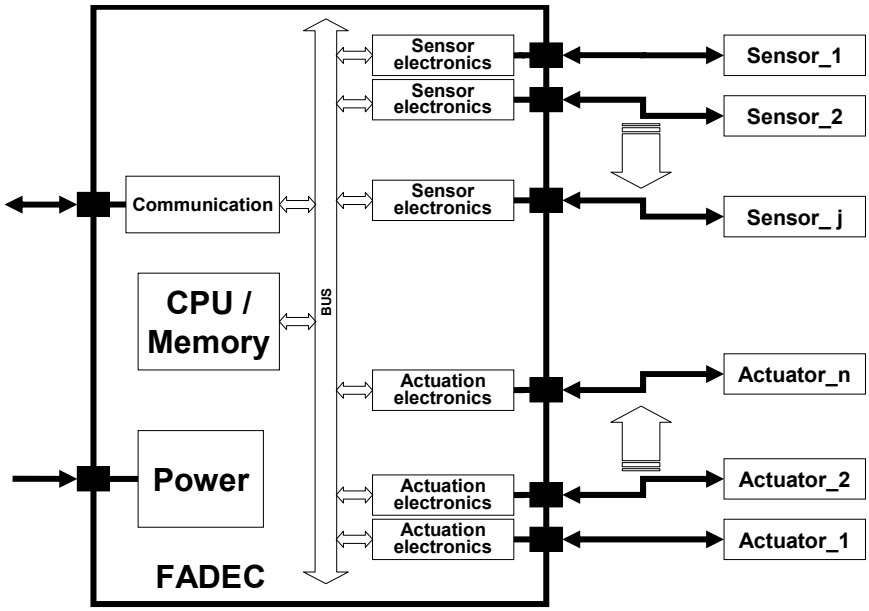

Figure 4.2: Centralized Engine Control Architecture. The FADEC houses specific electronics to interface with engine-mounted control elements (sensors and actuators). Dual redundancy is often used which drives up harness weight while connector size drives enclosure dimensions. The large FADEC housing is environmentally hardened, cooled, and co-located on the engine structure.

In a centralized architecture weight is primarily driven by the quantity and location of control system elements. Due to these weight restrictions and the limited availability of engine access points, there is a very significant pressure to minimize the number of sensors and effectors. With a limited number of control elements each have to be designed with the utmost reliability and well-understood failure modes. In order to drive element MTBF (Mean Time Between Failure) to an acceptable level, dual-redundancy is often used. The end result is a very high weight penalty in connecting the control element to the FADEC due to the number of conductors required and the construction of the wire harness. The weight penalty is minimized by locating the FADEC in near proximity on the engine structure.

The engine structure is quite a severe environment for an avionics package. Vibration and temperature extremes force the electronics to be custom designed for a specific engine. Circuit components are specifically designed for maximum density to achieve small physical size thereby increasing stiffness and raising the natural frequency of resonant mechanical vibration modes. This adversely affects heat dissipation in the assembly. The large number of conductors and the physical size of the connector shells mounted on the FADEC enclosure often drive the package dimensions. The entire package must be mounted on low frequency isolators to reduce the shock loads experienced over a mission profile. Examples of typical FADECs are shown in Figure 4.3.

Figure 4.3: FADEC Examples from the F414 and CFM56 Engines. Note the highly ruggedized packaging, closely spaced I/O connectors, and heavy isolation mounts which all contribute to C&A weight.

Temperature extremes at the engine structure require cooling to reduce the operating temperature of semiconductor junctions to an acceptable level. This is maintained by conduction cooling the entire assembly with a cold plate using the aircraft fuel supply as the heat removal media.

Under a centralized engine control system architecture, the need to reduce overall weight drives a chain of design constraints which result in an optimized engine control system, but one which is costly to both procure and maintain. Furthermore, because it is so highly optimized, it is inflexible to use in multiple platforms or even to accommodate upgrades in an existing application. Changing the engine control architecture to a distributed system can radically alter the interrelated chain of constraints which ultimately drive overall cost of ownership.

4.3 TOWARD DISTRIBUTED ENGINE CONTROL ARCHITECTURE

In a distributed engine control system architecture, as shown in Figure 4.4, any number of control elements are tied together through a common, standardized, communication interface. Sensors and effectors are replaced by control nodes which may provide sensor data, operate actuators, or perform combinations of both. The massive wiring harness which previously tied together the control element to interface circuitry in the engine-mounted avionics package is replaced by a simple but robust communication structure. Weight reduction is the primary motivation but the standardized interface is also an enabling feature which is necessary to effectively implement future adaptive control applications [4.1].

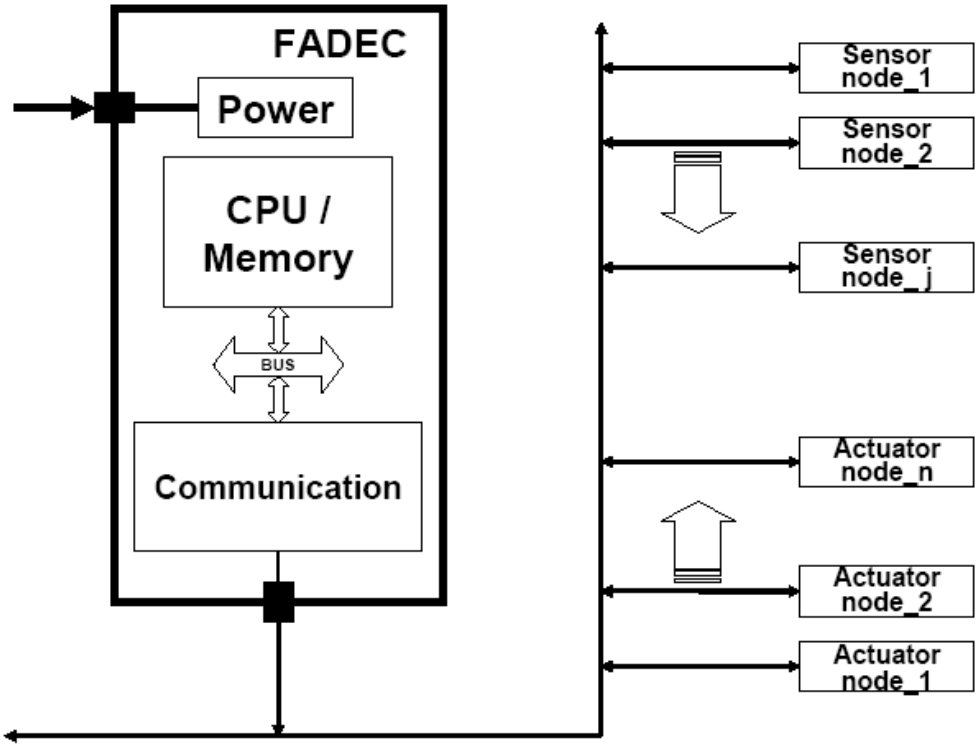

Figure 4.4: Distributed Engine Control Architecture. The FADEC is significantly reduced in size and located in a less severe environment because of a standardized network communications interface. System effectors, however, require intelligence to communicate over the network using a standard protocol. Harnessing weight no longer constrains the system design and the open communication architecture enables simplified expansion.

Control nodes in a distributed control system architecture are by definition "intelligent." Sensor nodes produce information about the physical state of the engine using a predefined data structure. This could take the form of a stream of temporal data in engineering units or a preprocessed state of an engine function, e.g. "impending stall." Similarly, actuator nodes receive commands and/or data from one or more sources to intelligently operate an engine actuator at its most efficient configuration.

In some instances, especially in new adaptive control applications like stall avoidance, high bandwidth, high response control may require nested control nodes which perform both sensing and actuation beneath the overall control communication structure. This is shown in Figure 4.5.

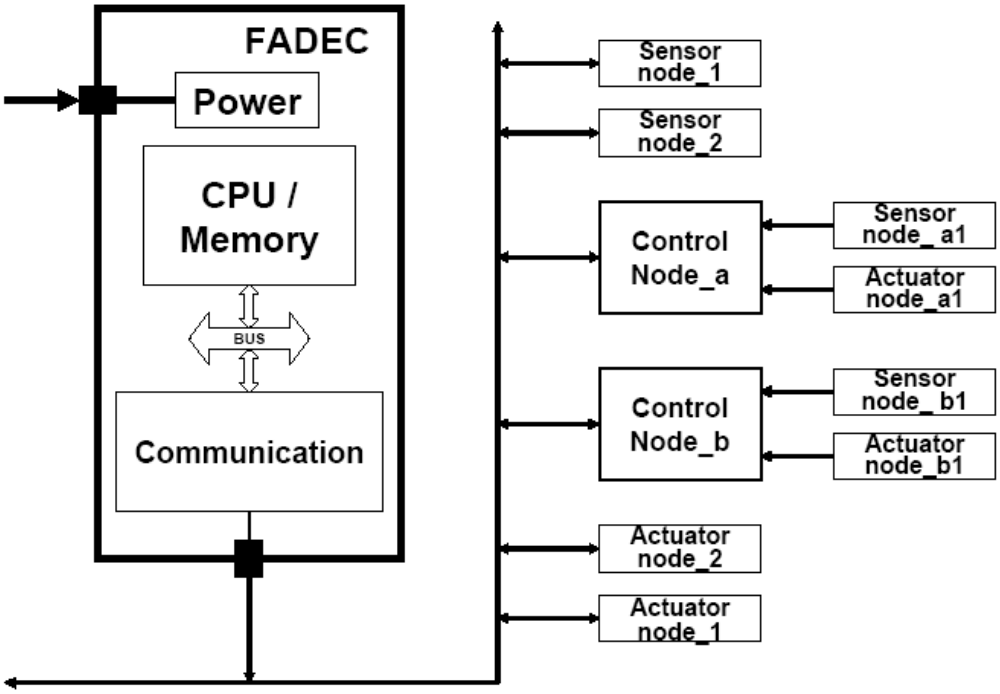

Figure 4.5: Extended Distributed Engine Control Architecture. The open network communication architecture does not constrain the function of the control element. Intelligent nested sub-loops enable the implementation of advanced adaptive control subsystems which may operate at significantly higher internal data rates.

The overall system control is still coordinated by the FADEC which is now physically much smaller. Its function becomes one of processing and communications. Since the communication network is standardized there is no longer a need for unique interface and signal conditioning circuitry for each control element. The number of conductors in each wiring harness and the connector shells do not dictate the avionics package configuration. The location of the FADEC is no longer critical allowing the most complex electronics hardware to be relocated in a more benign environment.

In a distributed engine control architecture weight optimization no longer drives the design and packaging of the FADEC. This leads to broad cross platform standardization and significant cost reductions in both acquisition and maintenance. The issue of system upgrade becomes one largely focused on software re-qualification instead of complete system re-qualification.

4.4 TECHNOLOGY CHALLENGES FOR DISTRIBUTED ENGINE CONTROL ARCHITECTURE

The implementation of distributed engine control is not without significant challenges and there are two "tall poles." These are the need for high temperature electronics and the development of simple, robust communications.

A substantial portion of weight incurred in centralized control was for packaging and cooling of the large avionics assembly. Although the FADEC has been relocated to a less hazardous environment the advent of intelligent control nodes implies that some electronic circuitry has been left behind to handle signal conditioning

and application specific processing functions at the node. These engine mounted components must be able to withstand the temperature and vibration extremes of the environment.

In many cases the temperature requirements will be even more extreme than those previously experienced by an engine mounted FADEC package due to the proximity of the node to the engine components. Recalling that weight is the overriding constraint, the electronics must be able to survive without the benefit of a cooling system. The location of the node will dictate the operating temperature requirement which in some cases could be as high as 500°C.

Standard silicon technology requires a junction temperature of less than 125°C for reliable operation. The capability of the electronic assembly to dissipate heat at the junction is highly design dependent but drives the ambient operating temperature to significantly lower levels, typically 70 to 85 °C maximum. Newer technologies such as silicon on insulator, and potentially silicon carbide, are increasing the design envelope but are still far short of achieving the desired operating temperatures to realize maximum weight reduction. In the absence of sufficient temperature capability, distributed architecture could still be implemented but with a weight penalty for additional structure to minimize heat soak from the engine.

By parsing the bulk of the electronics hardware to the control nodes the physical size of the FADEC package is greatly reduced although there are now more packages over the engine structure. By nature the smaller physical outline causes a shift in the mechanical resonant modes to higher frequencies. This inherently reduces the fatigue issue associated with vibration-excited resonance. Shock loads are still accommodated with isolators but the overall assembly weight is effectively reduced.

The second tall pole is communications. A communication network replaces the heavy point-to-point wiring harness which is a major contributor to system weight in a centralized control scheme. To be effective, communications must not only be reliable but must also be physically simple in terms of connecting nodes. It is imperative that the communication network be based on open system standards to achieve maximum flexibility and lower cost. An example of networked sensors suitable for distributed control is provided in Ref. [4.2].

It may be unlikely that one physical communication medium serves all purposes. Several concepts which are promising include wireless technology, fiber-optics, and communication over power distribution wires. Even though several physical layer media may be used in the actual implementation of distributed control it should be of minor significance in the effectiveness of the communication network.

NASA Glenn Research Center in conjunction with members of the U.S. (United States) Department of Defense and the U.S. Aerospace industry has established a Distributed Engine Control Working Group (DECWG) to examine the current and future technology requirements to enable distributed control for aircraft engines. The work of this group to date in terms of assessing the paradigm shift from centralized engine control architecture to an architecture based on distributed control using open system standards is summarized in Ref. [4.3]. This reference also provides a summary of the work being done in distributed engine control technology development since the 1990s.

4.5 ADDITIONAL BENEFITS OF DISTRIBUTED ENGINE CONTROL ARCHITECTURE

The modular, open system model for distributed engine control has additional benefits which will surely be exploited for cost savings, system reliability, and performance. Integrated Vehicle Health Management

(IVHM) will become more pervasive as embedded intelligence becomes the norm in each control node. Each sensor and actuator would be designed with built in test modes which perform local diagnostics at startup or during flight at the request of the FADEC or pilot. Self-calibration could, in many instances, be incorporated which would increase the accuracy of system data and improve overall performance. Finally, trend analysis could be used to track the degradation of systems and components leading to reduced maintenance cost by eliminating unnecessary scheduled tear downs.

Due to the open architecture diagnostics can be performed on several levels beginning at the local nodes and progressing over the entire system. In fact, diagnostic modules could be inserted anywhere, passively listening to the network traffic and evaluating conditions without impacting the system control.

Distributed systems also open up the possibility of more closely coupled engine/airframe systems. Assuming airframe sensing and actuation follow the same architecture then the engine and airframe are just extensions of the same control system. The engines, viewed in this mode, could even be considered as airframe actuators assisting in vehicle maneuvers.

4.6 SUMMARY

The transformation of engine control systems from centralized to distributed architecture is both necessary and enabling for future aeropropulsion applications. The continued growth of adaptive control applications and the trend to smaller, light weight cores is a counter influence on the weight and volume of control system hardware. A distributed engine control system using high temperature electronics and open systems communications will reverse the growing trend of control system weight ratio to total engine weight and also be a major factor in decreasing overall cost of ownership for aeropropulsion systems.

It is important to note that no new sensors or actuators are needed to enable distributed engine control. What is needed is to have on-board electronics located on or close to the sensing element or the actuator effector such that network communications can be enabled and the wiring harness required for communications between sensors and actuators and the engine controller can be substantially reduced. Another challenge for enabling distributed engine control is to supply the power needed for the on-board electronics – innovative power supply architectures and technologies will need to be developed to exploit the full potential benefits of distributed engine control.

4.7 REFERENCES

[4.1] Annex C.5 – D.E. Culley, R. Thomas, and J. Saus, *"Concepts for Distributed Engine Control"*, NASA TM-2007-214994.

[4.2] Annex B6.1 – Sophie Ramo and Miguel Bermudo (Presented by Pavol Rybarik), *"Endevco Smart Electronic Network"*, AVT Task Group 128 Meeting, May 2007, Florence, ITA.

[4.3] Behbahani, Alireza, Culley, Dennis, E., et al., *"Status, Vision, and Challenges of an Intelligent Distributed Engine Control Architecture"*, SAE Paper 2007-01-3859, SAE Aerotech Congress, Los Angeles, California, September 18-20, 2007.