Annex H – SUPPLEMENTAL INFORMATION ON OVERPRESSURE INJURY ASSESSMENT

H.1 INTRODUCTION

Overpressure caused by blast waves can generate life-threatening injuries to non-auditory internal organs/systems and incapacitating (but non life-threatening) auditory injuries. This annex presents background information on the overpressure as well as on the injury assessment for blast overpressure effects.

It should be noted that in case of a mine detonation under a vehicle the risk of high overpressure effects inside the vehicle is small when the vehicle integrity is secured. Although the ears are the most vulnerable body part to blast overpressure, ear injuries have an AIS score of only 1, even when they result in permanent hearing loss. Besides, the risk of permanent auditory injuries can be minimized when proper ear protection is worn. Because of these two reasons HFM-090/TG-25 decided that auditory injury assessment is not a mandatory criterion for the STANAG 4569. The reader is referred to [e.g. Chan, 2001; MIL-STD-1474D, 1997; Richmond, 1992; NATO, 2003; Dancer, 1995] for more background on auditory injury assessment.

The present annex is divided into five sections:

- Section H.1 – Introduction
- Section H.2 – Overpressure
- Section H.3 – Non-Auditory Injury Assessment
- Section H.4 – Conclusion
- Section H.5 – References

H.2 OVERPRESSURE

When an explosive charge detonates, the detonation products will expand and a shock wave will be generated. Figure H.1 shows an example of in a free-field environment. The shock wave is characterized by an instant rise of the pressure, from ambient pressure to peak pressure. After the pressure has reached his peak, it will decay to ambient pressure. Figure H.1 is a typical pressure-time curve for a high explosive (HE). In general, the shock wave will decrease when the distance to the explosive charge increases.

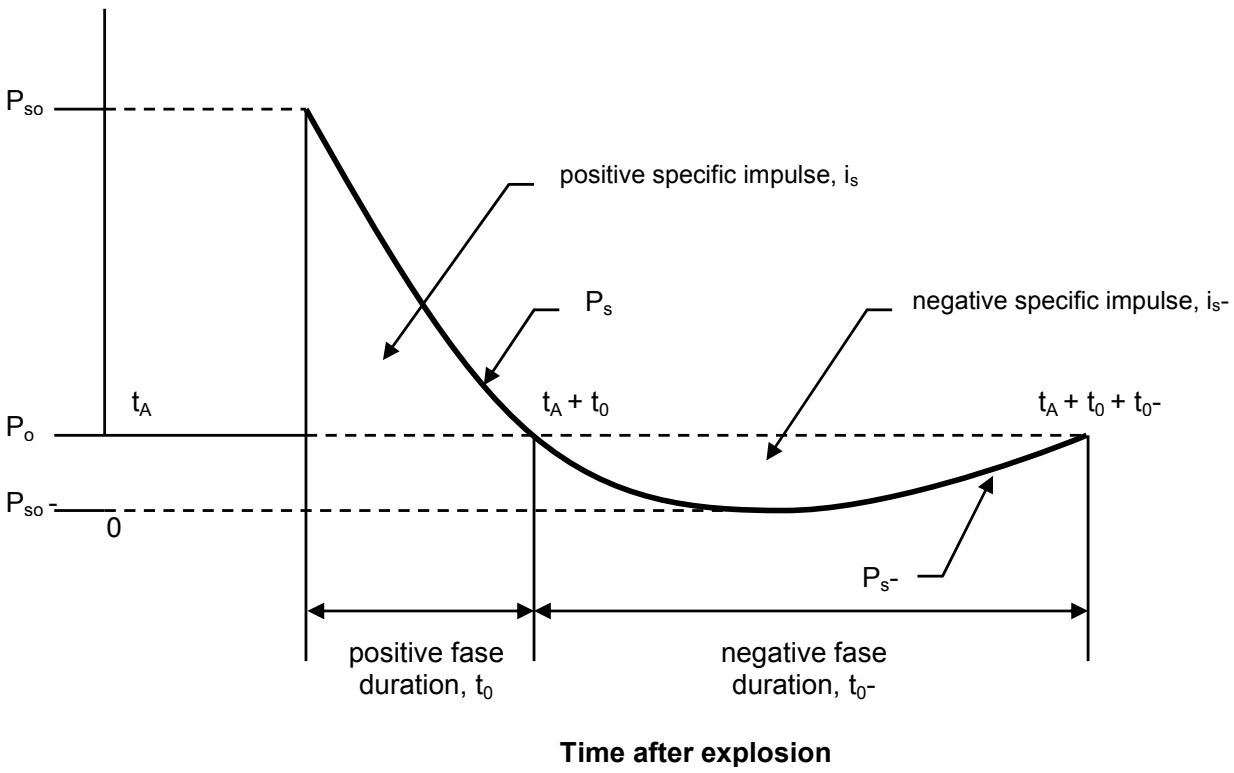

Figure H.1: Typical Pressure-Time Curve for a High Explosive (Free Field).

When the shock wave interacts with an object, reflection waves will be generated. The reflected pressure is higher than the incident pressure.

When the overpressure enters a vehicle a complex wave pattern can be generated when the overpressure interacts with the walls. Figure H.2 shows a more complex overpressure pattern.

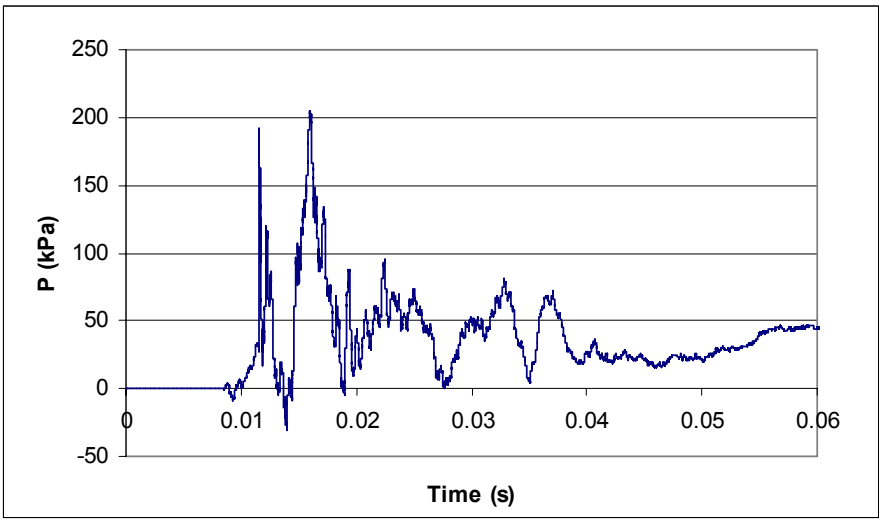

Figure H.2: Example of Complex Overpressure Pattern inside a Vehicle Subjected to a Blast Mine.

H.3 NON AUDITORY INJURY ASSESSMENT

Three different injury assessment models are described here

1) Bowen;
2) Stuhmiller; and
3) Axelsson.

Bowen, Stuhmiller and Axelsson derived their injury models based on animal test data, mainly with sheep. The models of Bowen and Stuhmiller are focused on lung injury, while the injury model of Axelsson includes injury to all vulnerable internal organs/systems.

H.3.1 Bowen Model

Bowen derived three curves to predict lethality and lung damage due to free field overpressure (Friedlander wave) [Bowen and Richmond, 1968]. These three curves are derived based on the orientation of the person, see Figure H.3:

A) Long axis of the body parallel to blast wind (person is only loaded with side-on pressure);

B) Long axis of the body perpendicular to blast wind (person is loaded with side-on pressure and dynamic pressure); and

C) Person near a reflected surface (person is loaded with reflected pressure).

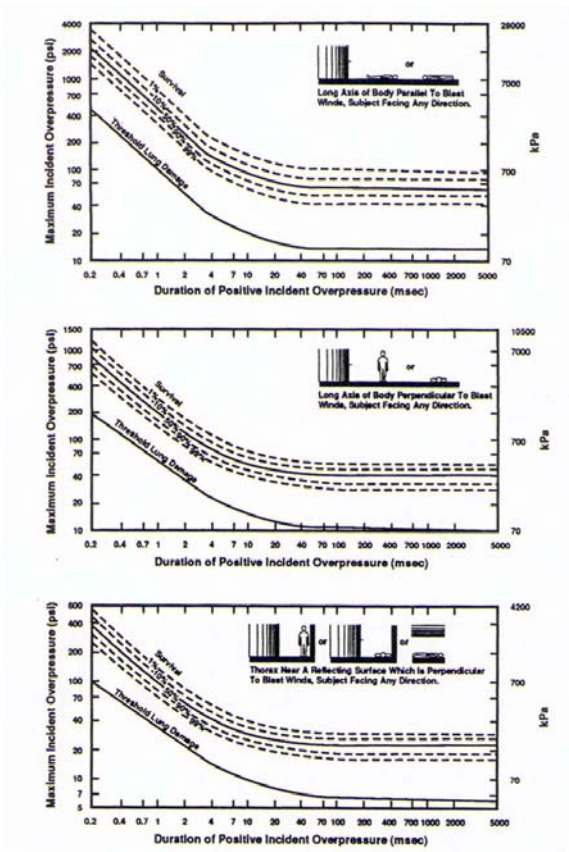

Figure H.3: Survival Curves Predicted for a 70-kg Man, Applicable to a Free-Stream Situation for Different Body Orientations with Respect to the Blast Winds [Richmond and Jenssen, 1992].

These curves were derived for a 70 kg man and in all three curves the incident pressure has to be implemented to predict the survivability. The threshold for lung damage and the survivability curves have lower values for the incident overpressure when a person stands for a reflecting object compared to a person standing in the free field. It should be noted that the survivability curves are based on the survivability of the animals 24 hours after the exposure to the blast. Based on [Richmond, 2004], the lung damage threshold refers to 'pin head' damage to the lungs having no physiological effects. The Bowen curves were recently reviewed [Bass, 2006].

The main limitation of the Bowen curves is that they were developed for ideal shock waves whereas complex waves are expected in a vehicle subjected to a mine. The two following models (Stumiller and Axelsson) presented were developed for complex waves.

H.3.2 Stuhmiller Model

The lung has initially been identified as the most critical major organ for incapacitation when injured by blast overpressure. Therefore, work was conducted to understand the mechanical properties of lung materials. Stuhmiller et al. has developed a mathematical model of the chest wall dynamics and the subsequent generation of strong pressure waves within the lung, which have been hypothesized as the mediator of injury [Stuhmiller, 1996]. This pleural dynamics model considers the forces on the chest wall due to the blast load, the internal pressure arising from the bulk compression of the lung, and the compression wave generated by the chest motion.

Since the lung behaves as a compressible material, the derivation of Landau and Lifhitz (1959) can be used, which relates the pressure wave in a compressible gas to the motion of a piston.

$$p(t) = p_0 * \left(1 + \frac{1}{2}(\gamma - 1)\frac{\upsilon}{c_0}\right)^{\frac{2\gamma}{\gamma-1}} \tag{1}$$

where:

- p is the pressure
- p_0 is the pressure in the undisturbed lung
- ρ_0 is the density in the undisturbed lung
- c_0 is the speed of sound in undisturbed lung
- υ is the velocity of the piston
- γ is the ratio of specific heats

If the piston velocity is very small compared with the speed of sound, then the equation can be expanded to give the linear form

$$p(t) \cong p_0 + \rho_0 c_0 \upsilon \tag{2}$$

where the adiabatic relation has been used

$$c_0^2 = \gamma \frac{p_0}{\rho_0} \tag{3}$$

If Newton's law is applied to the local thorax surface, imagining that the chest wall and lung form a rectangular region, the following equation of motion is obtained.

$$m\frac{d\upsilon}{dt} = P_{load}(t) - p_0\left(1+\frac{1}{2}(\gamma-1)\frac{\upsilon}{c_0}\right)^{\frac{2\gamma}{\gamma-1}} - \frac{p_0 L}{L-x} \tag{4}$$

where

υ is the velocity

x is the displacement

m is the mass/chest wall area

L is the ratio of the volume of the lung/chest wall area

If the velocity and displacement are small, the equation can be linearized to the form

$$m\frac{d\upsilon}{dt} = P_{load}(t) - \rho c_0 \upsilon - p_0\frac{x}{L} \tag{5}$$

Finally, the normalized work, W^*, defined as total work done to produce the wave divided by the volume of the lung and the ambient pressure, can be computed using the velocity found from the equation (7).

$$W^* = \frac{W}{p_0 V} = \frac{1}{p_0 L}\int_0^\infty \rho_0 c_0 \upsilon^2 dt \tag{6}$$

Injury is caused by a local excess strain of the tissue, whose details are not described by this model. A correlation of gross pathology, however, may be related to the average energy dissipated in the lung tissue, that is, the normalized work. Normalized, irreversible work done on the lung by the motion of the chest wall has proven to be an excellent correlate of pathology and lethality seen in animal tests [Stuhmiller, 1997]. This method stands for lung injuries due to complex and free field overpressure.

A two dimensional finite element (FE) model was constructed by Stuhmiller et al. that captured the geometric arrangement of four distinct parts: skeletal muscle, rib, lung, and a water filled organ such as the heart [Stuhmiller, 1988]. The results of the FE-model were compared with test data and showed good results.

To assist the process of making health hazards assessments, Stuhmiller has developed a computer program, INJURY [MOMRP, 2004]. The software computes the normalized work from each loading and the total lung injury can be predicted. Figure H.4 shows the layout of the program. The required input is the blast loading, specie, body mass, the number of shots, atmospheric pressure, start and end time. The output of the calculation is the probability of lung injury. There are five injury levels defined; severe, moderate, slight, trace and none.

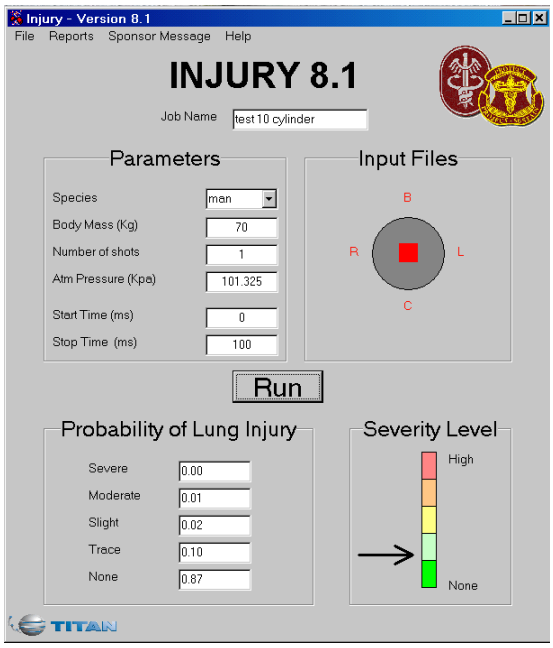

Figure H.4: Example of INJURY Program [MOMRP, 2004].

Unfortunately, there is not much information available on how the blast is related to the probability of lung injury.

H.3.3 Axelsson Model

The objective of Axelsson was to understand the effects of complex blast waves on the human body in order to find a simple tool for vulnerability assessment. The model developed by Axelsson is based on experiments performed by Yelverton [Yelverton, 1993], in which 255 sheep and an instrumented cylinder were exposed to complex blast waves in enclosures. The instrumented cylinder (Blast Test Device) was placed where the sheep were positioned. The cylinder was an aluminium tubular test module approximating the size of a sheep. The cylinder was instrumented with four pressure gauges recording the blast loading coming from four different directions. Axelsson used data of 177 of the 255 sheep submitted to complex blast waves in Yelverton study in order to develop a transfer function between injury severity and blast loading recorded on the cylinder.

A mathematical model of the thorax was developed to predict injury severity as a function of the loading recorded by the cylinder submitted by complex blast waves in different enclosures. A mathematical model of a two-chamber spring-mass system (two lungs) was initially developed by Bowen (1965) and Fletcher (1970). The model was then simplified to a single chamber one-lung model (shown in Figure H.5) assuming that the blast load, p(t), is acting simultaneously on both lungs.

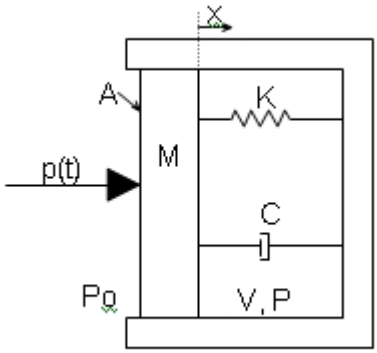

A is the effective area;

M is the effective mass;

V is the initial gaseous volume of the lungs;

x is the displacement;

C is the damper coefficient;

K is the spring constant;

P_o is the ambient pressure;

p(t) is the overpressure over the time; and

γ is the polytropic exponent for gas in lungs.

Figure H.5: Single-Chamber One-Lung Model [Axelsson, 1996].

The model is a single degree of freedom system in which chest wall response (displacement, velocity and acceleration) and intra-thoracic (lung) pressure can be calculated for different complex blast waves and ideal blast waves as well. The equation for the model is the following:

$$M \cdot \frac{d^2x}{dt^2} + C \cdot \frac{dx}{dt} + K \cdot x = A \cdot \left[p(t) + P_o - \left(\frac{V}{V - A \cdot x} \right)^{\gamma} \cdot P_o \right] \tag{7}$$

with the model parameters given in Table H.1.

Table H.1: Model Parameters for a 70 kg Mammal [Axelsson, 1996]

Parameter	Units	70 kg body*
M	kg	2.03
C	Ns/m	696
K	N/m	989
A	m^2	0.082
V	m^3	0.00182
γ	-	1.2

* For mammal of different body weight, scaling factors can be used as described in [Axelsson, 1996].

The input to the mathematical model is the external overpressure p(t), measured at the four locations (front, back and sides) on the cylinder. The displacement x(t) is then obtained and the maximal chest wall velocity can be determined for the four gauges located on the cylinder (v_1, v_2, v_3, v_4). The average velocity V is then calculated [$V = 0.25 * (\max v_1 + \max v_2 + \max v_3 + \max v_4)$] and is used to determine the injury severity expressed by the ASII (Adjusted Injury of Severity Index). The ASII includes injury to the lungs, upper respiratory tract, gastrointestinal tract and solid intra-abdominal organs and was developed by Yelverton, 1993. The ASII, with its 95% confidence levels, can be expressed as follows:

$$ASII = (0.124 + 0.117 \cdot V)^{2.63} \tag{8}$$

The ASII levels are associated with the velocity V or Chest Wall Velocity Predictor (CWVP).

The following tables (H.2-H.5) present the estimated AIS levels associated with the different 'injury levels' defined by Axelsson and Yelverton for the blast overpressure injuries to the lungs, pharynx, larynx and trachea, gastrointestinal tract and solid abdominal organs. In Table H.6 a summary is given of the relation between ASII, CWVP and AIS levels.

Table H.2: Injury Levels and Associated AIS Levels for the Lungs

Injury Level	Description or Signification	AIS Level
Negative	No injury.	0
Trace	Scattered surface petechiation or minimal ecchymoses involving less than 10% of the organ.	3
Slight	Areas of extensive petechiation to scattered parenchymal hepatization involving less than 30% of the organ.	3 – 4
Moderate	Areas of hemorrhage ranging from isolated parenchymal contusions to confluent hepatization involving less than 30% of the lungs.	3 – 4
Extensive	Isolated parenchymal contusions and confluent hepatized regions encompassing areas equal to or greater than 30% of the organ.	4 – 5

Table H.3: Injury Levels and Associated AIS Levels for the Pharynx, Larynx and Trachea

Level	Injury Description	AIS Level
Negative	No injury.	0
Trace	Scattered surface petechiation to isolated spots of ecchymosis less than one layer deep covering less than 10% of the organ.	2
Slight	Scattered petechiation to confluent contusions one to two layers deep involving less than 30% of the organ.	2 – 3
Moderate	Lesions ranging from ecchymotic spots to confluent contusions two layers deep, encompassing less than 60% of the available surface area.	3 – 4
Extensive	Areas of confluent contusions two or more layers deep, covering 60% or more of the organ.	5

Table H.4: Injury Levels and Associated AIS Levels for the Gastrointestinal Tract (Gas-Filled Organs)

Level	Injury Description	AIS Level
Negative	No injury.	0
Trace	Minor contusions with intact mucosa with no more than two gut layers or two organs involved with the contusions distributed over an area of less than 10 cm^2.	2 – 3
Slight	Scattered contusions generally distributed over an area of 10-20 cm^2 with some mucosal ulcerations.	4
Moderate	Multiple transmural contusions with mucosal ulcerations encompassing an area of 21-30 cm^2.	3 – 4
Extensive	Areas of more than 30 cm^2 of transmural contusions with concomitant perforation of the gut wall.	4 – 5

Table H.5: Injury Levels and Associated AIS Levels for the Solid Abdominal Organs

Level	Injury Description	AIS Level
Negative	No injury.	0
Trace	Small subcapsular contusions of hematomas involving less than 10% of one or two organs.	1
Slight	Subcapsular contusions or hematomas involving less than 30% of one or more organs with slight tears in the organ possible.	2
Moderate	Deep tears in the liver and/or maceration of the spleen with up to 60% of the organ damaged.	3 – 4
Extensive	Deep tears in the liver, maceration of the spleen or both with more than 60% of the organ traumatized.	4 – 5

See Table H.6 for a summary on the injury levels:

Table H.6: Injury Levels with Corresponding ASII and CWVP and Estimated AIS Levels

Injury Level	ASII (-)	V (m/s)	AIS Ranges*
Negative (no injury)	0.0 – 0.2	0.0 – 3.6	0
Trace to slight	0.2 – 1.0	3.6 – 7.5	1 to 4
Slight to moderate	0.3 – 1.9	4.3 – 9.8	2 to 4
Moderate to extensive	1.0 – 7.1	7.5 – 16.9	3 to 5
> 50% lethality	> 3.6	> 12.8	Up to 6

Considering that AIS 4 injuries might occur when the CWVP values is between 3.6 and 7.5 m/s (injury level: trace to slight), the acceptable CWVP tolerance value for the pass/fail test was set to 3.6 m/s. Based on the summary given in Table H.6, this value is believed to represent a very low risk of AIS 2 injuries, which is in accordance with the guideline of 10% risk of AIS 2+. However, it should be mentioned that when the blast loading on a body is known, the CWVP and corresponding injuries can be calculated, but that the risk of this type of injury is still unknown. Statistical studies on the injury data are needed to define risk curves.

H.4 SUMMARY

A summary of the available models for non auditory injury assessment is shown in Table H.7.

Table H.7: Injury Models for Non Auditory Injury Assessment

Model	Applicable to Ideal Waves	Applicable to Complex Waves	Organs Taken into Consideration
Bowen	Yes	No	Lungs
Stumiller	Yes	Yes	Lungs
Axelsson	Yes	Yes	All internal organs

In conclusion, the Axelsson & Yelverton model is the best available model for non-auditory blast injury assessment occurring during an AV blast mine strike. Considering that there are no risk curves available, it was decided to use a conservative approach and take the no injury level (3.6 m/s) as the limit for the chest wall velocity predictor.

Although it is known that the auditory system is the most vulnerable body region to blast overpressure, no pass/fail criterion has been proposed, because it is assumed that the crew will wear proper hearing protection. This will minimize the risk on temporary and permanent hearing injuries (both AIS 1 injuries). Besides it should be noted that when the vehicle integrity is guaranteed during a mine strike, the overpressure in the vehicle should be low, resulting into low injury risks for the non-auditory organs.

H.5 REFERENCES

Absil, L.H.J. et al. (2001), Collegedictaat: Pyrotechniek en Beschermingsconstructies, TNO-PML 2001-A27.

Axelsson, H. and Yelverton, J.T. (1996), Chest Wall Velocity as a Predictor of Nonauditory Blast Injury in a Complex Wave Environment, The journal of trauma, Vol. 40, No 3.

Bass, C. et al. (2006), Pulmonary Injury Risk Assessment for Short-Duration Blasts, In Proceedings of the Personal Armour Systems Symposium (PASS), Leeds, United Kingdom, September 20-22, 2006.

Bowen, I.G., Fletcher, E.R. and Richmond, D.R. (1968), Estimate of man's tolerance to the direct effects of air blast. Headquarters Defense Atomic Support Agency, Washington D.C.

Dancer, A.L. and Franke, R. (1995), Hearing hazard from impulse noise: a comparative study of twp classical criteria for weapon noises (Pfander Criterion and Smoorenburg criterion) and the LAeq8 method, Acta Acustica, 3, 539-547.

Mayorga, M.A. (1997), The pathology of primary blast overpressure injury, Walter Reed Army Institute of Research, Washington D.C., USA.

Mayorga, M.A. (2005a), A review of thermobaric weapon development, deployment and research, Blast injury consulting service, Maryland, USA.

Mayorga, M.A. (2005b), Primary blast effects to biological systems (presentation), Walter Reed Army Medical Center, Washington D.C., USA.

Military Operational Medicine Research Program (MOMRP) (2004), INJURY8.1. www.momrp.org

NATO (2003), Reconsideration of the effects of impulse noise RTO Technical report TR-017 AC/323 (HFM-022) TP/17.

Richmond, D.R. (2004), Personal communications.

Richmond, D.R. and Jenssen, A. (1992), Compendium on the biological effects of complex blast waves, Oslo Mil/Akershus N-0015, Oslo 1, Norway.

Stuhmiller, J.H., Chuong, C.J., Phillips, Y.Y. and Dodd, K.T. (1988), Computer modeling of thoracic response to blast, The journal of trauma, Volume 28.

Stuhmiller, J.H., Ho, K.H.H., Vander Vorst, M.J., Dodd, K.T., Fitzpatrick, T. and Mayorga, M. (1996), A model of blast overpressure injury to the lung, Biomechanics, Volume 29, No. 2.

Stuhmiller, J.H. (1997), Biological response to blast overpressure: A summary of modeling, Toxicology, 121.

Yelverton, J.T. (1993), Blast overpressure studies with animals and man: Final report – Biological response to complex blast waves, U.S. Army Medical Research and Development Command, Fort Detrick.