Annex I – TEST PROTOCOL FOR OCCUPANT SAFETY MEASUREMENTS AND INJURY ASSESSMENT

I.1 DESCRIPTION OF THE TEST SET-UP

I.1.1 Instrumentation for Injury Assessment

In order to qualify vehicles according to STANAG 4569 for mine tests (level 1 to 4), the following measurement tools **are required** for injury assessment:

- At least 1 instrumented Hybrid III 50th percentile male anthropomorphic test device (ATD).
- At least 2 pressure measurement devices.

A description and instruction of these tools are given in the paragraphs below.

The following tools **are strongly recommended** to include in the qualification tests to get more information on injury mechanisms and to have some redundancy:

- Sensors (displacement, acceleration, force) on seat and foot rest systems, vehicle structure and belts.
- Video cameras, both normal speed and high-speed (approximately 1000 frames per second) inside the vehicle.

These tools are not described in this document.

I.1.2 Description of the Anthropomorphic Test Device (ATD) Measurement

The following topics will be described in separate sections:

- Type of ATD;
- Instrumentation;
- Coordinate System;
- Certification and Calibration; and
- Boundary Conditions.

I.1.2.1 Type of Anthropomorphic Test Device

The standard Hybrid III 50th percentile male ATD (also called crash test dummy) has to be used to measure the human body biomechanical response in case of a mine detonation under a vehicle. The ATD is a regulated test device in the USA Code of Federal Regulations [CFR, 2003] for frontal car crash tests. This regulation refers to a General Motors drawing package identified by GM Drawing no. 78051-218, revision U, title “Hybrid III Anthropomorphic Test Device”, date August 30, 1998. In Figure I.1 a picture is given of the ATD inside a military vehicle.

Figure I.1: Examples of Hybrid III ATD in Test Vehicle.

In the case of a standing position, a conversion kit (e.g. 78051-281-PED-KIT of First Technology Safety Systems) can be installed on the standard sitting Hybrid III to make the standing posture possible.

The standard Hybrid III ATD comes with non-instrumented tibias (part of the lower legs). For mine vehicle qualification tests, both non-instrumented tibias have to be replaced by instrumented tibias called Denton leg [Denton, 1984]. The instrumented tibias need to be equipped with a lower tibia load cell that records the axial force (Fz). Depending on additional desired instrumentation, different models of the lower tibia load cells and also upper tibia load cells can be included (Denton, 2002. Drawing Number B-3500-D).

The 50th %-tile ATD represents the average male of an USA-population between 1970s and 1980s with the following figures:

- Length (standing position): 1.72 m;
- Weight: 78 kg; and
- Erect sitting height: 0.88 m.

I.1.2.2 Instrumentation of the ATD

At least the following sensors need to be adapted to the ATD:

- Lower Tibia Load Cell in right and left leg: axial force (Fz);
- Pelvis Accelerometer: vertical acceleration (Az); and
- Upper Neck Load Cell: shear force (Fx), axial force (Fz) and flexion/extension moment (My).

In Figure I.2 the position of these sensors is given.

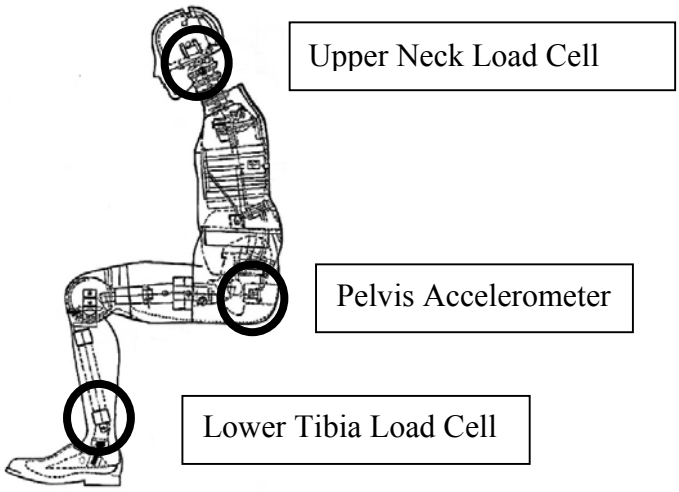

Figure I.2: Hybrid III ATD with Sensor Positions.

It is recommended to extend the instrumentation with:

- Five-axis load cell in the lower tibia of both legs (Fx, Fy, Fz, Mx, My);
- Five-axis load cell in the upper tibia of both legs (Fx, Fy, Fz, Mx, My);
- Tri-axial accelerometers on the mid tibia shaft in both lower legs (Ax, Ay, Az);
- One-axis load cell (shear force) in both femurs (Fx);
- Tri-axial accelerometers in pelvis, thorax and head: (Ax, Ay, Az);
- Five-axis load cell in the lumbar spine (Fx, Fz, My or Fx, Fy, Fz, Mx, My); and
- Six-axis load cell in the upper neck (Fx, Fy, Fz, Mx, My, Mz).

Note: The tri-axial accelerometers on the mid tibia shaft is not a standard option in the instrumented Denton leg model for the Hybrid III ATD.

I.1.2.3 Coordinate System

The standard coordinate system as described in SAE J211/1 [SAE, 2003] has to be used. In Figure I.3 this coordinate system is presented for the sitting and standing man. The coordinate systems are local body coordinates and follow the orientation of that specific body part. For the upper leg (femur) the z-axis is along the longitudinal axis of the femur; so it is rotated over 90° for the sitting posture (not shown in Figure I.3).

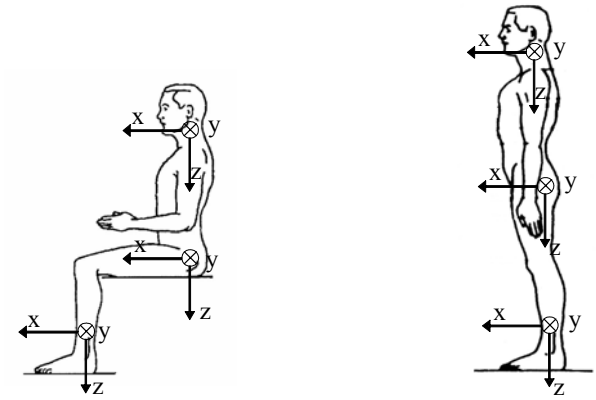

Figure I.3: ATD Local Body Coordinate System.

For the positive direction of the moments around the axis the 'right-hand-rule' should be followed for the body part **below** the sensor. A positive moment around the y-axis (My) means a forward bending. The positive polarities of the sensors and the method to check these directions are listed in the SAE J211/1. They are summarised in Table I.1 for the required measurement positions.

Table I.1: Positive Polarities for the Channels at the Required Measurement Positions

Sensor	Measurement	ATD Body Part Motion	Polarity
Upper neck load cell	Fx	Head rearward, chest forward	+
	Fy	Head leftward, chest rightward	+
	Fz	Head upward, chest downward	+
	Mx	Left ear to left shoulder	+
	My	Chin toward chest (forward bending)	+
	Mz	Chin toward left shoulder	+
Pelvis accelerometers	Ax	Pelvis accelerates forward	+
	Ay	Pelvis accelerates to the right	+
	Az	Pelvis accelerates downward	+
Lower tibia load cell	Fx	Foot forward, knee rearward	+
	Fy	Foot rightward, knee leftward	+
	Fz	Foot downward, knee upward	+
	Mx	Foot leftward, knee in place	+
	My	Foot toward knee	+

I.1.2.4 Certification and Calibration

The ATD consists of a steel skeleton and rubber elements and is surrounded by rubber and foam material to simulate the skin and flesh. The characteristics, like stiffness and damping, have influence on the

internal loads in case of impact or loading transfer. Therefore, the characteristics should meet specific requirements, which are verified in a certification test.

The sensors inside the ATD are mechanical devices which translate the load into an electrical signal. The signal is being recorded by the data-acquisition system which has to be provided with information about the sensitivity of that particular sensor. Each sensor has to be calibrated to give the relation between load and signal amplitude. Due to repetitive loadings, overloads or aging of the mechanical sensor, re-calibration is necessary on a regular base. For certification and calibration, refer the ATD user's manual [SAE, 1998].

It is advised that the ATD will be certified and the sensors be calibrated at least each two years. This advice is based on several years of experience with the use of the ATD in the Vehicle Mine Protection research area and valid for 'normal usage'. This means: 15 to 20 tests, loads within the ranges of the sensors, no structural damage to the ATD and the storage of the ATD in a dark room and at a constant temperature of about 20° C.

In case of an overload of a sensor, re-calibration of this sensor is mandatory.

I.1.2.5 Boundary Conditions

The stiffness of the joints in the ATD has to be settled by hand ("one G suspended setting") conform instructions on ATD handling (see the users' manual [SAE, 1998]). After each test, the stiffness settings in the ATD have to be checked.

Because of the temperature influence on the characteristics of the rubber elements and the skin of the ATD, a constant temperature between 20 and 22° C on the test site is preferred (according to crash test regulations). However, in general tests sites are out-side locations and temperature can hardly be controlled. A temperature of 10° to 30° C inside the vehicle is advised. In winter time, a heater inside the vehicle could prevent too cold conditions and reduce moisture.

I.1.3 Hybrid III Positioning

For positioning the Hybrid III inside the vehicle, the following aspects are important:

- Position in the vehicle;
- Seating posture; and
- Clothing.

I.1.3.1 Position in the Vehicle

The ATD has to be placed at one of the original crew positions inside the tested vehicle. This should be the 'worst-case' position: the position that is expected by the 'National Authority' to give the highest loads inside the ATD for a particular detonation position under the vehicle.

I.1.3.2 Seating Posture

The seating posture of the ATD should be realistic and representative for a person with the same sizes as the 50th percentile ATD sitting in an upright position. The straight seating posture should be achieved by placing the pelvis well in the seat cushion and the back of the ATD in contact with the seat back cushion (when available).

It should be mentioned that for some seating systems an upright position is not possible for a human. For these cases the most realistic position need to be checked by a volunteer (preferably with the same sizes as the 50th percentile ATD) and mimicked with the ATD.

The feet have to be placed in the same way as for a real sitting or standing person. When footrests are available and part of the protection measures, they have to be used. In case of a driver, the right leg should be on the accelerator pedal and the left one on the resting position. For both legs a realistic body posture has to be achieved. By considering this general requirement the lower leg longitudinal axis should be as good as possible perpendicular to the foot plate to provide a worst-case set-up (see Figure I.4).

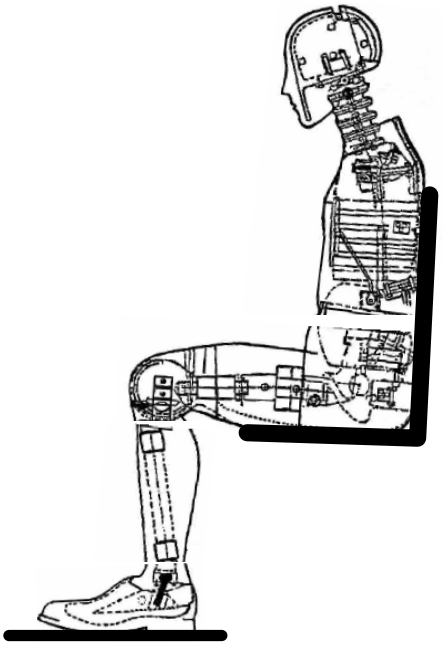

Figure I.4: Straight Seating Posture.

The hands and arms should be placed in a realistic position. In case of steering wheel or joy sticks, the hands should grip these devices, else the hand should be placed in a resting position on the upper leg. The hands should not be fixed to the steering wheel or legs, but tape can be used to keep the hands in position prior to the test.

The seat has to be adjusted according to the size and weight of a 50th percentile man. If different seat positions are possible for different functions and scenarios (e.g. combat vs. driving under homologation conditions in peace keeping operations) the worst-case position of the seat has to be tested. In case of the usage of periscopes or other vision tools, the seat has to be adjusted in such a way that the eye-level of the ATD corresponds to these vision systems.

All available protective measures, like seat belts and head rests should be used and installed correctly.

When seat belts are available, they have to be used in the original way. Remove slack in the belts and tightened them as realistic as possible. In case of a belt retractor, allow it to retract the belt to remove slack.

In case of repetitive tests or similar tests at other proving grounds, the same seating posture of the ATD should be kept.

I.1.3.3 Clothing

The clothing of the ATD should correspond to that of a real crew member or passenger of the tested vehicle. For filming purposes, the uniform can be replaced by an overall with a clear visible colour (contrast with background).

The footwear (shoes or boots) should be the same as normally used by the real personnel of that type of vehicle and the footwear should be in good condition, without any damages. For soldiers, combat boots are recommended. Also the use of socks is recommended.

When the occupants wear personnel protective equipment (helmets, vests, etc.) in normal operational conditions, the ATD should wear the same equipment.

I.1.4 Description of the Pressure Measurement Devices

Inside the vehicle the pressure has to be measured to analyse the effects on the gas filled internal organs in the thorax and abdomen. The Chest Wall Velocity (CWV) model is used to assess injury to these organs. As input for this model the reflected overpressure on the thorax has to be measured.

The overpressure inside the vehicle is caused by the shock wave, which is formed by the mine detonation. Due to reflections a complex blast wave environment exists and the directions of the blast waves could not be predicted. It is assumed that the overpressure on the chest is a dominant factor for injuries to the gas filled organs.

The overpressure could also cause temporary or permanent auditory injuries. This will not be assessed, because the HFM-090/TG-25 stated that hearing protection systems, such as ear plugs or earmuffs, can easily prevent this type of injuries. Therefore, no mandatory criterion on auditory injuries is included.

At least two positions for pressure measurements are mandated:

- One on the chest of the Hybrid III ATD.
- One on a second Hybrid III ATD (when available) or at the crew location where the highest overpressure loads are expected.

To measure the reflected pressure it is important to have a correct simulation of the body (= reflected area) and appropriate transducer fixed on this device. The chest of the Hybrid III ATD represents the body dimensions and thus is proposed as mount of a pressure transducer.

For blast overpressure it is hardly possible to define a worst-case location and the position of the ATD is not always the worst-case position for both the mechanical and the pressure loads. Therefore, at least a second location for pressure measurements is advised. This second location should be on an occupant position also.

I.1.4.1 Pressure Measurement Device on the Chest of the ATD

It is **recommended** to use a flat measurement device strapped on the chest of the ATD as shown in Figure I.5. The ATD is dressed and the device must be fastened on the outside of the clothes. The device should consist of a plate with a flat transducer fixed in or on this plate (see Figure I.6). To avoid inertia problems for the ATD response the device should be as light as possible. It is recommended to use hard plastic materials for the mount.

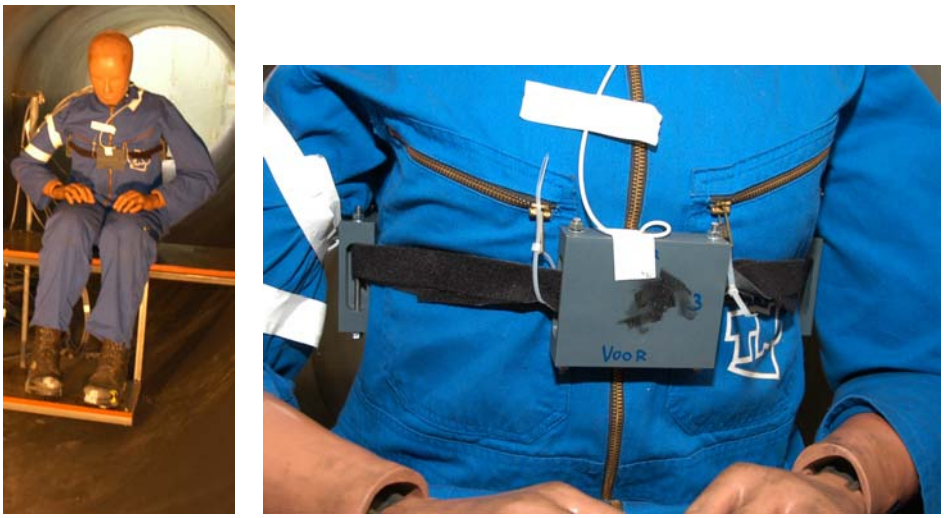

Figure I.5: Example of Pressure Measurement Device on the Chest of an ATD.

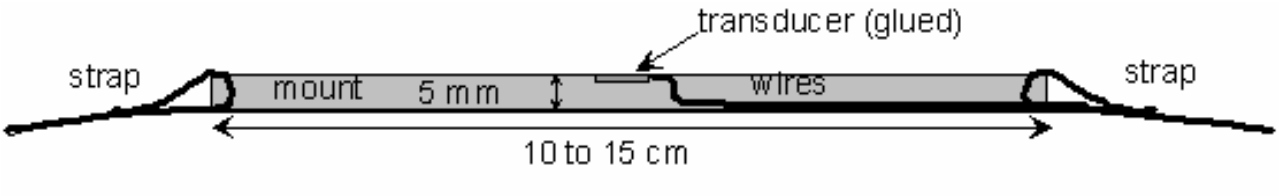

Figure I.6: Example of a Flat Pressure Measurement Device.

I.1.4.2 Pressure Measurement Device at Another Position

For another measurement position than the chest of the Hybrid III, it is necessary to have a plane as reflected area at or close to a crew position. This crew position should be the position where the highest overpressure might be expected. The back of the seat could be used as reflected area in combination with the same pressure measurement device as described above. The transducer should be orientated in the same direction and at the same height as the chest of a human being located on that position.

When no appropriate reflecting plane for the pressure measurement device is available, the original blast test device (cylinder) as described by Axelsson & Yelverton, [Axelsson, 1996], can be used (see Figure I.7).

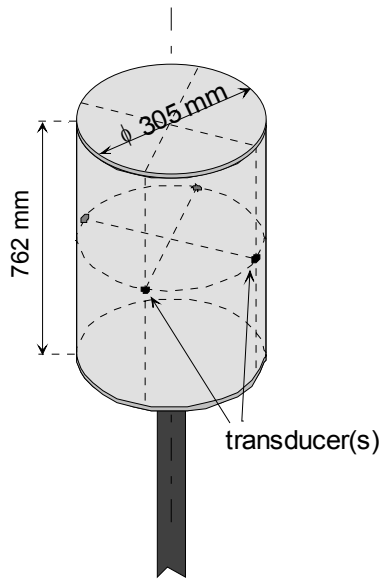

Figure I.7: Example of a Cylinder for Pressure Measurements.

The dimensions of this cylinder are: height of 762 mm, diameter of 305 mm. Although the human thorax has smaller dimensions it is suggested to follow the original blast test device dimensions and stay as close as possible to the original injury model.

The pressure transducer(s) should be fixed in or at the cylinder at half height. The material for the cylinder should be hard enough to protect the transducer and the wires and to reflect sufficiently the incident pressure.

When the frontal direction (chest direction) for the measurement location is known, at least one single transducer in the cylinder is needed in the same frontal direction (like in case with an ATD). For a standing position and when the crew member at that position can face any direction 4 sensors have to be used. For the conservative approach in the injury assessment, the worst-case sensor in terms of peak velocity must be considered.

I.1.4.3 Pressure Transducer Specifications

For fixation on a plate, a flat transducer (< 1 mm) should be used. It can be glued or screwed on that plate.

For fixation in a plate or in the cylinder, other transducers can be used as long as the opening of the sensor is flat with the outer surface.

The following specifications are recommended for the pressure transducer:

- Full scale range > 300 kPa;
- Resonance frequency at least 50 kHz; and
- Time constant (transducer and amplifier) at least 200 ms.

I.1.5 Data Acquisition

The following parameters are important for the acquisition of the data:

- Trigger;

- Sample rate;
- Anti-aliasing filtering;
- Resolution; and
- Signal duration.

I.1.5.1 Trigger

It is recommended to use the mine initiation or detonation as trigger time (T0) for the data-acquisition systems. In case of more than one data-acquisition system and/or video-system, it is preferred to use the same trigger pulse.

I.1.5.2 Sample Rate

For ATD measurements only a minimum sampling rate of 10 kHz is specified in the specifications (SAE J211/1, [SAE, 2003]). However, to increase the accuracy of the output (to about 1%) for the mine loading situations, a sampling rate of 200 kHz or higher (at least 10 times the cut-off frequency of the anti-aliasing filter) is advised for ATD measurements. A sampling rate of 200 kHz to 1 MHz is advised for structural and pressure measurements.

I.1.5.3 Anti-Aliasing Filtering

The ATD-signals have to be filtered by (analogue) filters in the data-acquisition system to avoid aliasing and transducer resonance. It is up to the expertise of the measurement team to define the best filtering method and parameters. It is recommended to use a cut-off frequency of at least 10 kHz.

I.1.5.4 Resolution

Digital word lengths of at least 12 bits (including sign) should be used according to the standards (SAE J211/1, [SAE, 2003]) for the ATD measurements. However, based on experience in mine tests, higher digital word lengths are recommended for reasonable accuracy in case of low signal amplitude in relation to the maximum range of the sensors.

I.1.5.5 Signal Duration

The duration of signal measuring depends on the process and should include the initial loading phase and the global vehicle response inclusive the drop-down phase. For light weight vehicles (< 10 tons), this process can take 2 seconds as a maximum. A pre-signal (approximately 100 ms if the trigger origin is known) has to be stored for signal zeroing.

I.1.6 Signal Processing

After the tests, the measured signals have to be processed for the injury assessment:

- Signal zeroing; and
- Signal filtering.

Both the measured signals (raw data) and the processed signals have to be stored.

I.1.6.1 Signal Zeroing

The measured signals have to be corrected for zero offset errors before trigger time. For determining the offset, the average zero offset in the stored pre-signal should be taken.

I.1.6.2 Signal Filtering

The signals of the ATD measurements have to be filtered by a low-pass (digital) filter routine according to the Channel Frequency Class (CFC) specifications as described in SAE J211/1 (revision December 2003) [SAE, 2003].

The following CFCs are defined:

- CFC1000, cut-off frequency 1650 Hz;
- CFC600, cut-off frequency 1000 Hz;
- CFC180, cut-off frequency 300 Hz; and
- CFC60, cut-off frequency 100 Hz.

A double 2-pole Butterworth low-pass filter method should be used for filtering. The following steps are prescribed for the phaseless filtering method (SAE J211/1, revision March 1995, [SAE, 1995]):

- Pass the original signal through the 2-pole Butterworth low-pass filter (1.25 * cut-off frequency);
- Reverse the filtered signal;
- Pass the reversed signal through the 2-pole Butterworth low-pass filter again (1.25 * cut-off frequency); and
- Reverse the signal again to get the filtered signal without phase shift.

By multiplying the cut-off frequency with the factor of 1.25 and use this in a numerical filter routine, a response is obtained conform the CFC-response as written in the SAE standard.

It is important to use an appropriate tool and computation method to apply above described steps and to choose the best signal parameters, like sample rate, with respect to this computation method.

The use of the Fast Fourier Transform (FFT) of the signals in the computation is recommended in the latest standard (see SAE J211/1, revision December 2003).

The following CFCs are specified for the measured ATD signals (SAE J211/1):

- Head, Thorax and Pelvis accelerations CFC1000
- Neck forces CFC1000
- Neck moments CFC600
- Lumbar spine forces and moments CFC600
- Leg forces and moments (femur, knee, tibia and ankle) CFC600
- Belt forces CFC60

Note: It is recommended to use raw signals for overpressure injury assessment (no filtering).

I.2 DESCRIPTION OF INJURY ASSESSMENT

I.2.1 Critical Body Parts

In case of mine detonations under a military vehicle, the occupants are loaded by the shock, local structural motions and deformations and global vehicle motion. The following body parts are considered as the most vulnerable parts:

- Lower leg (foot/ankle/tibia-complex);

- Thoraco-lumbar spine region;
- Head/neck region; and
- Internal organs/systems (vulnerable to overpressure).

The qualification of a vehicle depends whether the body response for these body parts are below the tolerance levels that are defined. The response of the other body parts may still result in injury, but are assumed to be less critical, and therefore are not included in the mandatory injury criteria list.

I.2.2 Injury Criteria

The following list of injury criteria are mandatory and used as pass/fail criteria for the tested vehicle:

- Lower Tibia Axial Compression Force (Fz);
- Dynamic Response Index (DRIz) for axial direction;
- Upper Neck Axial Compression Force (Fz);
- Upper Neck Flexion and Extension Moment at the occipital condyles (Myoc); and
- Chest Wall Velocity Predictor (CWVP) for non-auditory overpressure injuries.

In Table I.2 information is given about the tolerance values and injury levels for these criteria. The limit values are based on two important parameters in the injury biomechanics: injury severity and injury probability. The tolerance levels were established based on a guideline of a maximum of 10% risk of AIS 2 (moderate injuries). This implies that AIS 1 (minor) injuries are accepted too. Injury risk curves are not available for all body regions, but this guideline (10% risk of AIS 2+) was followed as much as possible to define the tolerance limits.

Table I.2: Mandatory Criteria and Limit Values

Body Region	Criteria	Tolerance Value	Signification	Reference
Lower leg	Peak lower tibia axial compression force (-Fz)	5.4 kN	10% risk of AIS 2+	[Yoganandan, 1996]
Thoraco-lumbar spine	Dynamic Response Index (DRIz), calculated with pelvis Az	17.7	10% risk of AIS 2+	[Brinkley, 1970]
Cervical spine (neck)	Upper neck axial compression force (-Fz)	4.0 kN @ 0 ms 1.1 kN @ 30 ms (see curve in Figure I.8)	Serious (AIS 3) injuries are unlikely*	[Mertz, 1978]
	Upper Neck Moment: Flexion ($+My_{oc}$) Extension ($-My_{oc}$)	190 Nm 57 Nm	Significant (AIS 2+) injuries are unlikely*	[Mertz, 1984]
Non-auditory internal organs	Chest Wall Velocity Predictor (CWVP)	3.6 m/s	No injury*	[Axelsson, 1996]

* An injury risk curve is not available.

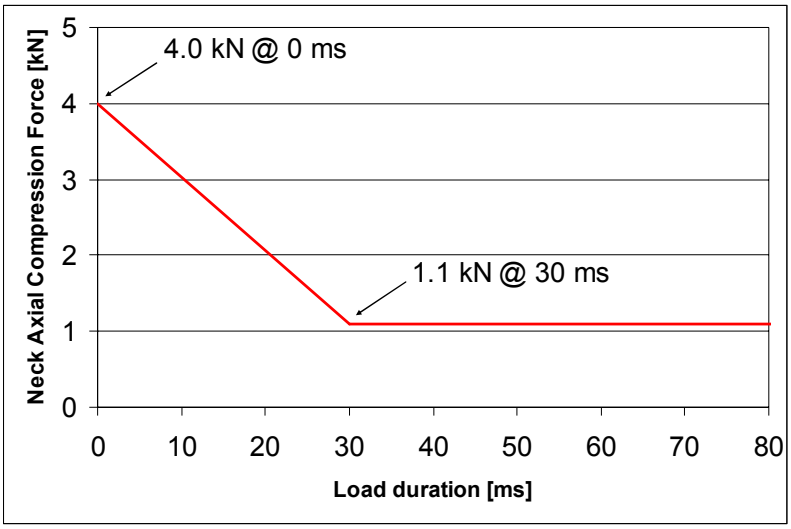

Figure I.8: Neck Axial Compression Limit Curve.

A description of the DRIz and CWVP model is given below.

I.2.2.1 DRIz Model Description

The Dynamic Response Index (DRIz) is a criterion for axial compression injuries in the thoraco-lumbar spine. The DRIz is a dimensionless value related to the spine deflection. This deflection is the output of a 2nd order mass-spring-damper system (see Figure I.9) with the vertical pelvis acceleration as the input.

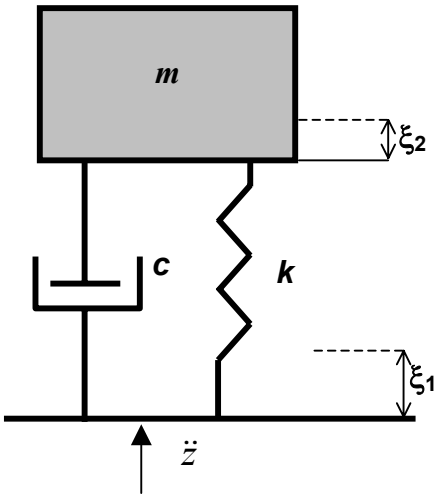

Figure I.9: Mathematical Spine Model.

The equation of motion for this model is:

$$\ddot{z}(t) = \ddot{\delta} + 2 \cdot \zeta \cdot \omega_n \cdot \dot{\delta} + \omega_n^2 \cdot \delta$$

where

- $\ddot{z}(t)$ is the acceleration in the vertical direction (in m/s^2);

- $\delta = \xi_1 - \xi_2$ (>0) is the deflection (compression) of the system;
- $\zeta = \dfrac{c}{2 \cdot m \cdot \omega_n}$ is the damping coefficient (0.224); and
- $\omega_n = \sqrt{\dfrac{k}{m}}$ is the natural frequency (52.9 rad/s).

The DRIz is calculated with the maximum compression $\delta_{\max}$, ω_n and the gravity acceleration g (9.81 m/s^2):

$$DRIz = \frac{\omega_n^2 \cdot \delta_{\max}}{g}$$

Note: While the DRIz-model is developed for **compression** injuries to the spine, the input acceleration signal should be positive for the loading direction causing this compression. In the standard coordinate system of the ATD, a negative acceleration signals causes this compression. This means that the output signal of the ATD needs to be multiplied by minus 1, before it can be used for calculating the DRIz.

I.2.2.2 CWV Model Description

The measured reflected overpressure (p(t)) is used as input for the Chest Wall Velocity model as described below (see Figure I.10).

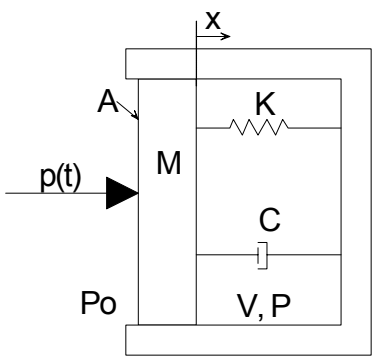

A: effective area;

M: effective mass;

V: initial gaseous volume of the lungs;

X: displacement;

C: damping factor;

K: elasticity constant;

P_0: ambient pressure;

P(t): overpressure; and

γ: polytropic exponent for gas in lungs.

Figure I.10: Thorax Model.

$$M \cdot \frac{d^2x}{dt^2} + C \cdot \frac{dx}{dt} + K \cdot x = A \cdot \left[p(t) + P_o - \left(\frac{V}{V - A \cdot x} \right)^{\gamma} \cdot P_o \right]$$

The model is a second order (nonlinear) differential equation and the following values for the model constants have to be used (based on a 70 kg man):

- $A = 0.082\ m^2$
- $M = 2.03$ kg
- $C = 696$ Ns/m
- $K = 989$ N/m
- $V = 1.82 * 10^{-3}\ m^3$
- $P_0 = 1.0 * 10^5$ Pa
- $\gamma = 1.2$

For the injury assessment, the velocity (dx/dt) profile has to be calculated. This velocity is called the Chest Wall Velocity Predictor (CWVP).

I.2.3 Injury Assessment

The processed signals are input for the injury assessment following the mandatory injury criteria. The outcome is compared to the defined tolerance levels, which results in a pass or a fail of the vehicle.

I.2.3.1 Lower Leg

For lower leg injury assessment the measured axial force (Fz) in the lower tibia has to be used. The peak value for the compression force (negative part) has to be determined.

Pass: $|Fz_p| < Fz_c$

Fail: $|Fz_p| \geq Fz_c$

- Fz_p [kN]: The peak value (maximum amplitude) in the compression (negative) part of the axial force signal in the lower tibia.
- Fz_c [kN]: The critical limit value given in Table I.2.

This lower leg injury assessment has to be done for both the left and the right leg.

I.2.3.2 Thoraco-Lumbar Spine

For the spine injury assessment the measured vertical acceleration (Az) in the pelvis has to be used as input. Note: take care of the polarity of the acceleration system (see Section I.2.1 for the DRIz-description).

Pass: $DRIz_p < DRIz_c$

Fail: $DRIz_p \geq DRIz_c$

- $DRIz_p$ [-]: The peak value (maximum amplitude) in the compression (positive) part of the output of the DRI-routine.
- $DRIz_c$ [-]: The critical limit value for the DRIz given in Table I.2.

The complete acceleration signal has to be used as input for the routine to calculate the Dynamic Response Index. It is expected to find the maximum DRIz value in the initial phase (in general within 100 ms). The DRIz-value in the drop-down phase when the vehicle hits the ground surface should be checked and compared with the DRIz in the initial phase to see which one is the highest. It is advised to use a plot of

the simulated spine deflection as check for the time-step at which the maximum spine compression (in the initial phase) and thus the maximum DRIz-value is reached. Take care of drift in the pelvis acceleration signal, while this could give too high DRIz-values at other time steps.

I.2.3.3 Neck Injury

The measured axial force (Fz) and the measured flexion/extension bending moment (My) in the upper neck should be used as input for the neck injury assessment.

I.2.3.3.1 Axial Compression Force Criterion

Both the peak value of the compression force (negative part) and the duration of the compression force levels have to be determined. The method to determine the duration is given in the standard SAE J1727, [SAE, 1996], and described below.

Pass: $|Fz(\delta)| < Fz_c$-curve

Fail: $|Fz(\delta)| \geq Fz_c$-curve

- $Fz(\delta)$ [kN]: The compression force as function of the load duration.
- Fz_c [kN]: The critical limit curve given in Figure I.11.

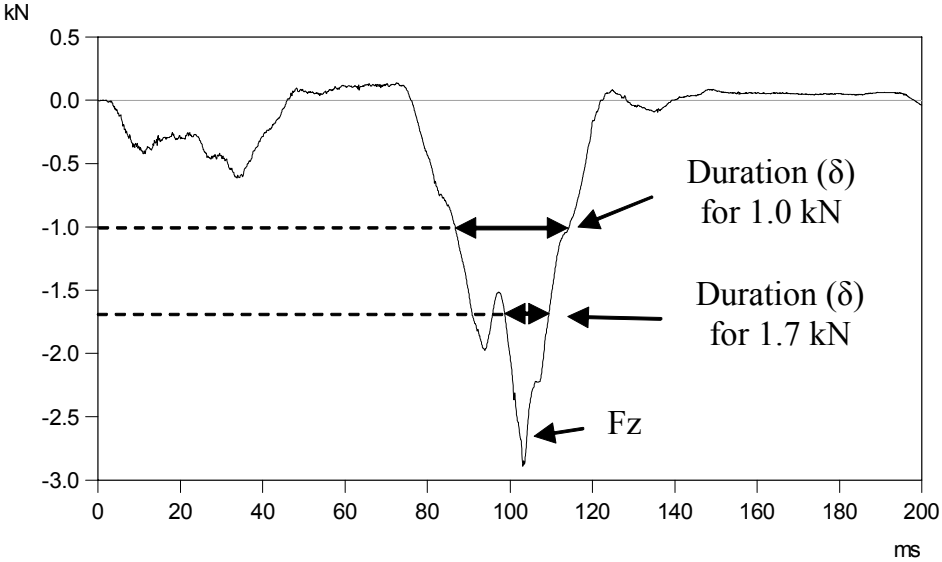

Figure I.11: Example of Defining the Maximum Duration for Two Load Levels.

The duration of the load does not need to be calculated when:

Pass: $|Fz_p|$ < lowest limit value of the Fz_c-curve (1.1 kN)

Fail: $|Fz_p| \geq$ highest limit value of the Fz_c-curve (4.0 kN)

- Fz_p [kN]: The peak value (maximum amplitude) in the compression (negative) part of the axial force signal in the upper neck.

The following steps have to be followed to determine the duration of the loading, as described in SAE J1727 [SAE, 1996]:

- Determine the maximum value of the compression load and assign a duration of zero to it.

- Create a matrix of two columns and 101 rows. In the first column the load levels from maximum to zero will be stored. Each subsequent load value will be equal to the previous minus 1/100 of the peak value.
- For each load level, determine the maximum continuous time interval that the measured load exceeds this level and store this in the second column, see Figure I.11.
- Plot the points of the matrix in the criterion graph, see Figure I.8.

I.2.3.3.2 Flexion/Extension Moment Criterion

The flexion- extension moment at the occipital condyles is calculated using the formula:

$$My_{oc} = My - Fx * d$$

- My_{oc} [Nm]: The flexion-extension moment around the occipital condyles;
- My [Nm]: The measured flexion-extension moment in the Hybrid III upper neck;
- Fx [N]: The measured shear force in x-direction in the Hybrid III upper neck;
- d [m]: The lever arm of the upper load cell, see [Vehicle safety workgroup, 2005] d = 0.01778 (for the 6-axis load cell, 50%-tile Hybrid III).

The peak value in the flexion moment (positive part of the My_{oc}-signal) has to be determined.

Pass: $My_{oc_p}+ < My_{oc_c}+$

Fail: $My_{oc_p}+ \geq My_{oc_c}+$

- $My_{oc_p}+$ [Nm]: The peak value (maximum amplitude) in the flexion moment in the upper neck;
- $My_{oc_c}+$ [Nm]: The critical limit value for flexion as given in Table I.2.

The peak value in the extension moment (negative part of the My_{oc}-signal) has to be determined.

Pass: $|My_{oc_p}-| < My_{oc_c}-$

Fail: $|My_{oc_p}-| \geq My_{oc_c}-$

- $My_{oc_p}-$ [Nm]: The peak value (maximum amplitude) in the extension moment in the upper neck;
- $My_{oc_c}-$ [Nm]: The critical limit value for extension as given in Table I.2.

I.2.3.4 Overpressure Injury

The peak value of the Chest Wall Velocity Predictor (CWVP), which is the output of the CWV model for a measured pressure signal, has to be determined.

Pass: $|CWVP_p| < CWVP_c$

Fail: $|CWVP_p| \geq CWVP_c$

- $CWVP_p$ [m/s]: The peak value (maximum amplitude) of the Chest Wall Velocity Predictor calculated by the numerical model for a measured overpressure signal.
- $CWVP_c$ [m/s]: The critical limit value of the CWVP given in Table I.2.

I.3 REFERENCES

Axelsson, H. and Yelverton, J.T. (1996), Chest Wall Velocity as a Predictor of Non-Auditory Blast Injury in a Complex Blast Wave Environment, The Journal of Trauma, Injury, Infection and Critical Care.

Brinkley, J.W. and Shaffer, J.T. (1970), Dynamic Simulation Techniques for the Design of Escape Systems: Current Applications and Future Air Force Requirements, Symposium on Biodynamic Models and their Applications, Report No. AMRL-TR-71-29, Aerospace Medical Research Laboratory, Wright-Patterson Air Force Base, Ohio, USA.

CFR 49 (2003), Code of Federal Rules (CFR), Title 49-Transportation, Chapter V – National Highway Traffic Safety Administration (NHTSA), Department of Transportation, Part 571, Federal Motor Vehicle Safety Standard (FMVSS) 208.

Denton, R.A. Inc. (2002), Instrumented Lower Leg Assembly, Patent No. 4, 488, 433.

Denton, R.A. Inc. (1984), Crash Test Dummy Lower Leg Structure, Patent No. 4, 488, 433.

Mertz, H.J., Hodgson, V.R., Murray Thomas, L. and Nyquist, G.W. (1978), An assessment of Compressive Neck Loads Under Injury-Producing Conditions, The Physician and Sport Medicine, November.

Mertz, H.J. (1984), Injury Assessment Values Used to Evaluate Hybrid III Response Measurements, NHTSA Docket 74-14, Notice 32, Enclosure 2 of Attachment I of Part III of General Motors Submission USG 2284, March 22.

SAE J1727 (1996), Surface Vehicle Recommended Practice, Injury Calculations Guidelines, Issued August.

SAE J211/1 (1995), Surface Vehicle Recommended Practice, (R) Instrumentation for Impact Test – Part 1 – Electronic Instrumentation, Revision March.

SAE J211/1 (2003), Surface Vehicle Recommended Practice, (R) Instrumentation for Impact Test – Part 1 – Electronic Instrumentation, Revision December.

SAE (1998), Society of Automotive Engineers, User's Manual for the 50th Percentile Male Hybrid III Test Dummy, Dummy Testing Equipment Subcommittee, SAE Engineering Aid 23, June.

Title 49 – Transportation Chapter V – National Highway Traffic Safety Administration (NHTSA), Department of Transportation, Part 572 – Anthropomorphic Test Device.

Vehicle Safety Workgroup, (2005), Crash Analysis Criteria Version 1.6.2, Arbeitskreis Messdatenverabeitung Fahrzeugsicherheit, April 2005.

Yoganandan, N., Pintar, F.A., Boyton, M., Begeman, P., Prasad, P., Kuppa, S.M., Morgan, R.M. and Eppinger, R.H. (1996), Dynamic Axial Tolerance of the Human Foot-Ankle Complex, 962426, Society of Automotive Engineers, Warrendale, PA, USA.