Chapter 3 – CHARACTERISTICS OF PLT AND xDSL TRANSMISSION SYSTEMS

Since 1998 there are many developments underway to give commercial and domestic users access to wideband high-data rate systems, some of which use the "existing copper infrastructure", for example, electricity mains or telephone lines.

Signalling over the mains network has existed for many years at operating frequencies up to 148.5 kHz in Europe and 525 kHz in USA, Canada and Japan, in the form of low data rate transmissions. To achieve higher data rates, new developments in modem technology showed that it was possible to use higher frequencies and wider bandwidths to communicate along the mains, using frequencies from 1.6 to 30 MHz (USA and Canada: up to 80 MHz) and with data rates of several Mbps.

Telephone wires in particular have been used to provide Internet access for some time. The signals have been restricted to the voice band (300 Hz to 3.4 kHz) so that they can use the Public Switched Telephone Network (PSTN). To achieve higher data rates, greater bandwidth is needed, and this requires higher frequencies of transmission. Bandwidth utilisation has increased to over 10 MHz for Very high-speed Digital Subscriber Line (VDSL), one of the xDSL family, operating at higher speeds than Asymmetric Digital Subscriber Line (ADSL).

PLT potentially offers transmission of data and Voice over Internet Protocol ("VoIP") via normal electrical power lines that are incorporated in every household. The main application of PLT also could be described as "Internet from the socket". The benefit of PLT is that it uses the already existing and widely deployed electricity network, permitting new services without the need for additional wiring.

PLT technology is feeding a high data rate signal into a local mains power supply network to which all energy, as well as telecom customers, are connected in parallel.

Due to this, the transmission capacity of the system has to be shared among all telecom users who are operating simultaneously. In addition, even if only one telecom customer shall be supplied with a PLT-based data service, the whole area of the local power supply network is carrying the transmission signal and acting as an area radiator.

In contrast to PLT technology, DSL technology supplies each DSL customer separately with an individual telephone cable. The transmission capacity of the DSL system does not have to be shared among several telecom users operating simultaneously.

The electricity and telephone wirings used for broadband data transmission and its potential for unwanted HF emission are described in detail in the following paragraphs.

Parts of this chapter are based on [32].

3.1 TRANSMISSION ON POWER LINES (PLT)

Electricity usually is generated in remote power plants, transformed up to high voltage (HV, 230 – 400 kV, 50 or 60 Hz) and sent over long distance via overhead power lines to a grid exit. There substations step the voltage down and supply electricity to local power lines for distribution. Typically, the electricity is transformed to a sub-transmission voltage (66 – 132 kV) using interconnecting transformers and then transformed to medium voltage (MV, 1 – 50 kV). Finally, in the distribution substation, the power is transformed to low voltage (LV, 100 – 240 / 240 – 415 V) [26],[91],[31, Subpart G, Section 15.603].

Power Line Telecommunications use existing power lines to transmit broadband communications in home networking environments and to deliver telecommunication services to homes and businesses. Figure 3.1-1 shows different possible locations of connecting the telecommunications network to the energy network. Levels 1 – 3 are separated by different transformers and level 4 from level 3 by the house access point.

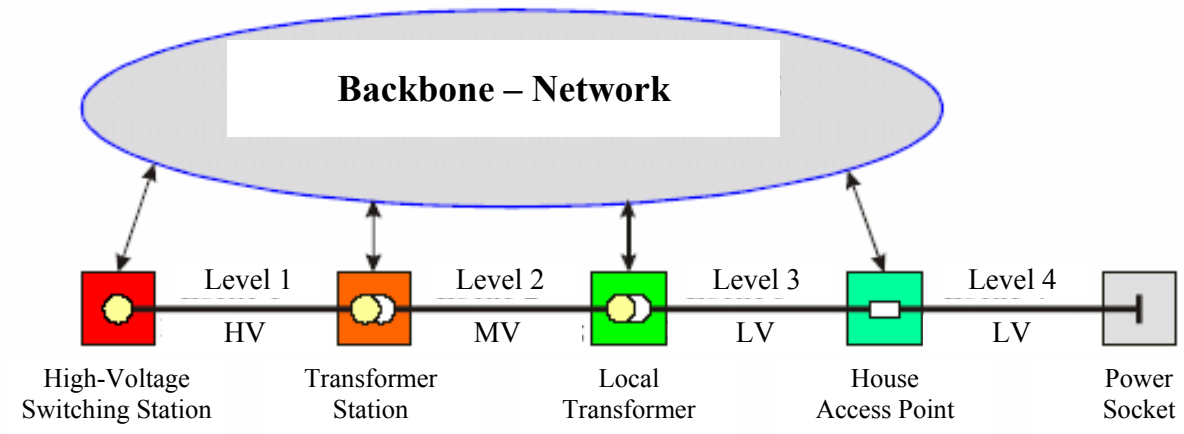

Figure 3.1-1: Alternative Connections between Telecommunications and Energy Networks.

3.1.1 Power Line Systems

Power Line Telecommunications technology (PLT, PLC), or Broadband over Power Line (BPL) in North America, uses the Medium Voltage (MV) or Low Voltage (LV) power distribution network as a telecommunication infrastructure for the transport of broadband HF signals. There presently exist two main families of PLT applications:

- Access PLT (outdoor PLT, connecting the home to the outside) whose target market is the "last mile" between substation and the subscriber, and therefore is an alternative solution for the access to the telecommunication local loop.
- In-House PLT whose aim is to distribute signals (coming for example from Access PLT or from DSL) to the electric plugs inside homes (home networking).

In Europe, PLT Access systems are, generally, overlaid on Low Voltage Electricity Distribution Networks (LVEDNs). The power lines from the LV-Transformer to the individual homes in business and residential areas are underground cables, and in rural and quiet rural zones they are mostly overhead lines. In general, European PLT Access systems utilize underground cables, as HF radiation from overhead power lines is supposed to be much too high. Figure 3.1.1-1 shows the broadband signal flow in a usual Access System (Transformer Substation – House Access Point), In-House System (House Access Point – Mains Sockets), and the potential connection points for PLT modems.

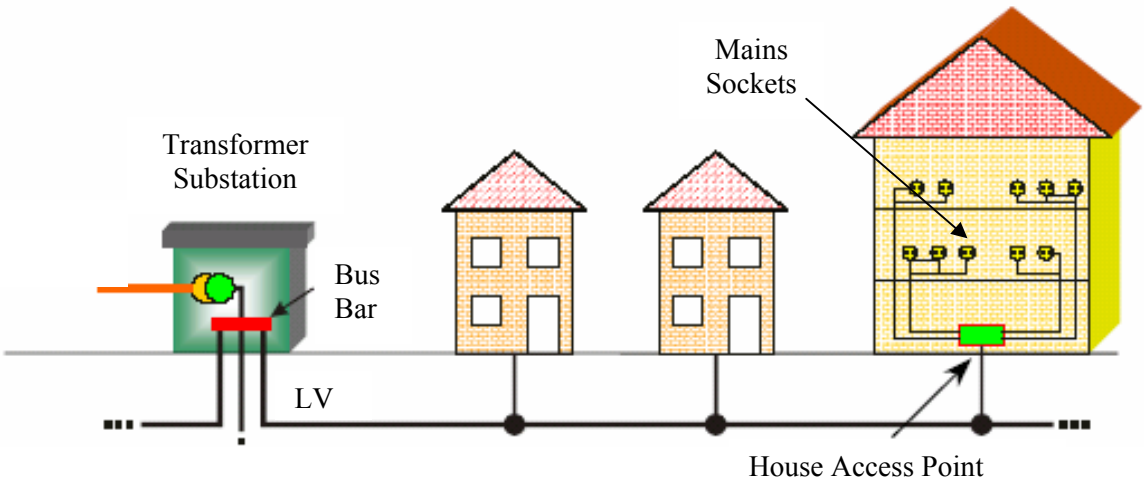

Figure 3.1.1-1: Basic PLT System in Europe with Three Different Potential Connection Points for PLT Modems (arrows).

In the USA, Canada, Japan and some other countries outside Europe, BPL (PLT) Access systems generally also include parts of the Medium Voltage Electricity Distribution Networks (MVEDNs). Figure 3.1.1-2 illustrates the basic BPL Access and In-House system, which can be deployed in cell-like fashion over a large area served by existing MV power lines. Access BPL equipment consists of injectors (also known as concentrators), repeaters and extractors. BPL injectors are tied to the Internet backbone via fibre or T1 lines and interface to the Medium Voltage power lines feeding the BPL service area.

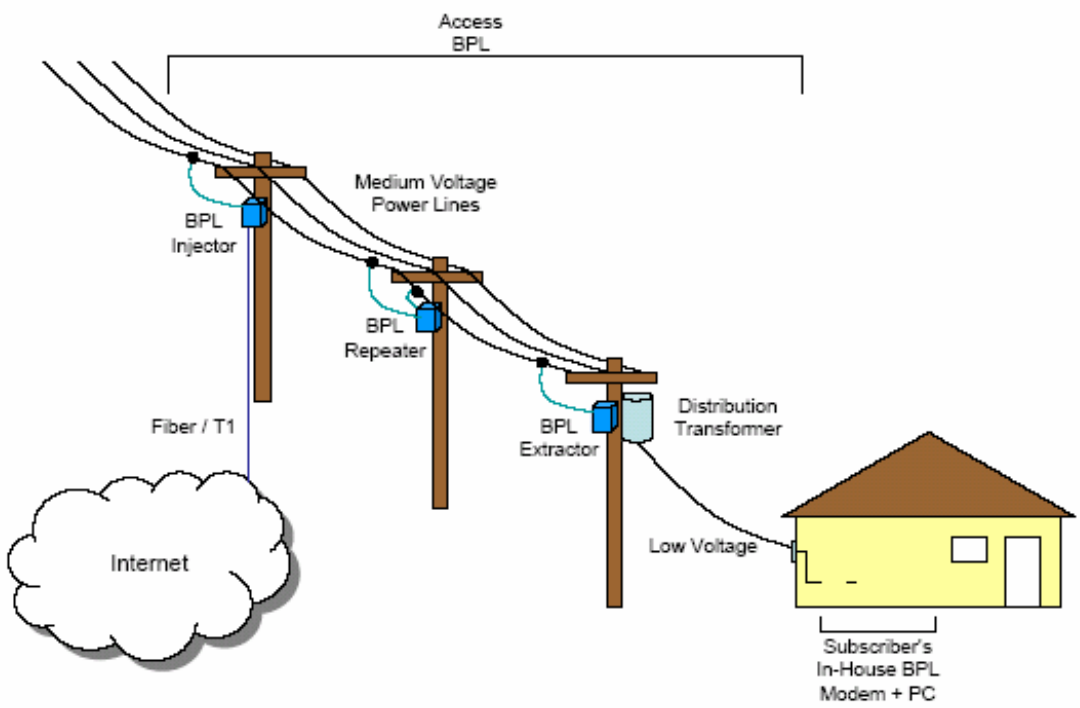

Figure 3.1.1-2: Basic BPL System.

3.1.2 Medium (MV) and Low Voltage (LV) Systems

In the USA, Canada and other countries outside Europe, MV power lines may be overhead on utility poles or underground in buried conduit. Overhead wiring is attached to utility poles that are typically 10 metres above the ground. Three phase wiring generally comprises an MV distribution circuit running from a substation, and these wires may be physically oriented on the utility pole in a number of configurations (e.g., horizontal, vertical, or triangular). This physical orientation may change from one pole to the next. One or more phase lines may branch out from the three phase lines to serve a number of customers. A grounded neutral conductor is generally located below the phase conductors and runs between distribution transformers that provide Low Voltage (110/220 V) electric power for customer use. The neutral lines at LV consumers are earthed by connection to this grounded neutral conductor (TN-C, see below).

PLT signals may be injected onto power lines between two phase conductors, between a phase conductor and the neutral conductor, or between a single phase or neutral conductor and earth.

Extractors (see Figure 3.1.1-2) provide the interface between the MV power lines carrying PLT signals and the households within the service area. BPL extractors are usually located at each LV distribution transformer feeding a group of homes. Some extractors boost PLT signal strength sufficiently to allow transmission through LV transformers and others relay the PLT signal around the transformers via couplers on the proximate MV and LV power lines. Other kinds of extractors interface with non-PLT devices (e.g., Wireless Fidelity /WiFi™) that extend the PLT network to the customers' premises.

For long runs of MV power lines, signal attenuation or distortion through the power line may lead PLT service providers to employ repeaters to maintain the required PLT signal strength and fidelity.

Power distribution systems differ in handling Low Voltage N lines (Neutral) and PE lines (Protection Earth). Most European countries use the TN or TT system (first letter T: The transformer neutral is earthed; second letter N: The frames of the electrical loads are connected via earth conductors to the earth provided by the supplier; second letter T: The frames of the electrical loads are connected via earth conductors to a local ground connection). If the TN system uses one (combined) connector for N and PE (PEN), a "C" is added. Figure 3.1.2-1 shows a typical German TN-C-S network; the "S" added means that N and PE are separated out in the in-house installation. This is for separate in-house distribution of N and PE and in-house potential equalization (connections to local earth and metallic conduits).

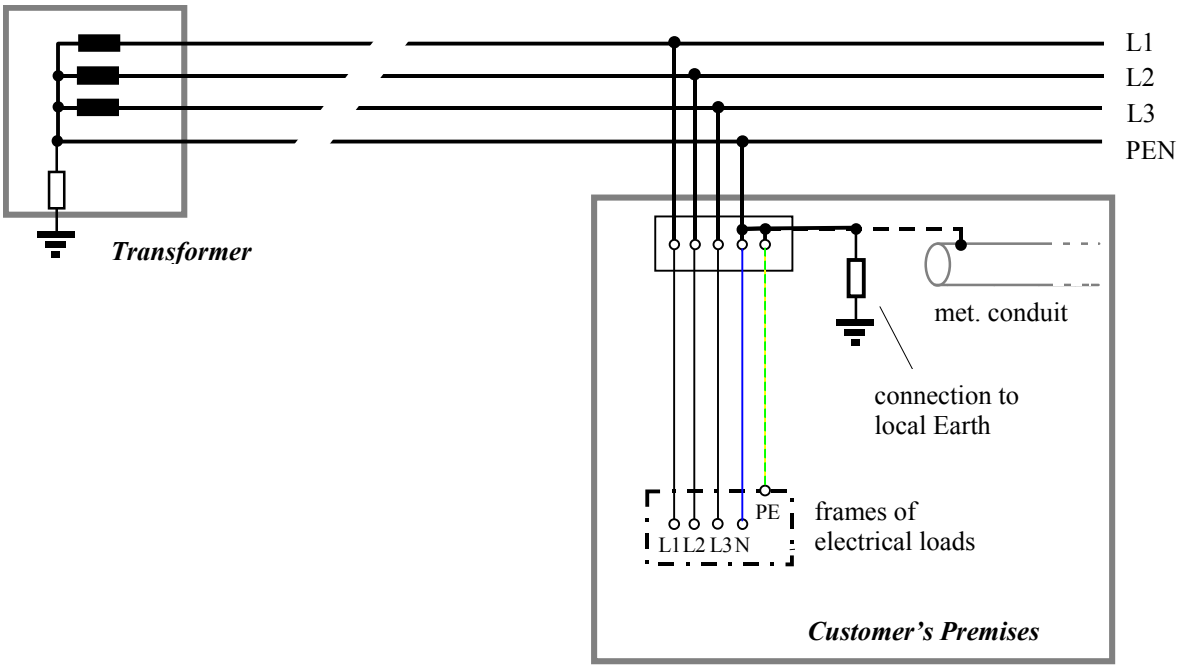

Figure 3.1.2-1: Power Line TN-C-S Network.

In Norway, the legacy power distribution system differs from most other countries in one important aspect: Other than most European countries, Norway and Albania use the IT system (I: Transformer Neutral is isolated) [26],[91]. In the IT system, ground is not distributed to the customers' premises, but established locally at each site by connecting to earth. IT systems may operate with ground fault (one of the phases connected to ground), and therefore ground faults in IT systems are not always detected. There is a possibility, which has not yet been investigated, that PLT over the IT system may impose more interference than over the TN system: The common-mode signal will be injected between the wiring and the earth, and in case of an undetected ground fault, the differential signal will actually be injected between the earth and the fault-free phase.

Power distribution installations to new houses in Norway use the TN system.

In the following paragraphs Access and In-House systems are described in detail with respect to possible impedance discontinuities, which are sources of HF radiation (see Section 3.1.5).

3.1.3 Access Systems

In Europe usually the local transformer (Figure 3.1-1) is connected to the backbone telecommunications network. The energy distribution system from the LV transformer to the consumers' premises forms the PLT Access system. For different reasons only underground cable systems are regarded.

Figure 3.1.3-1 shows a usual German Low Voltage Electricity Distribution Network (LVEDN) [32]. The LV transformer ("Trafo") is the centre of the network. Up to 10 power lines supply electricity to a maximum of about 400 premises (mean 100 – 200), each power line supplies 30 to 40 premises. The usual length of a line is less than 1 km. Most lines are underground; in rural areas few lines may be overhead with a tendency to be replaced by underground cables. Power supply to each premise is realized by splitting the cable in front of the premises via a sleeve. Additional cable distribution cabinets facilitate meshed networks for better handling of fault situations.

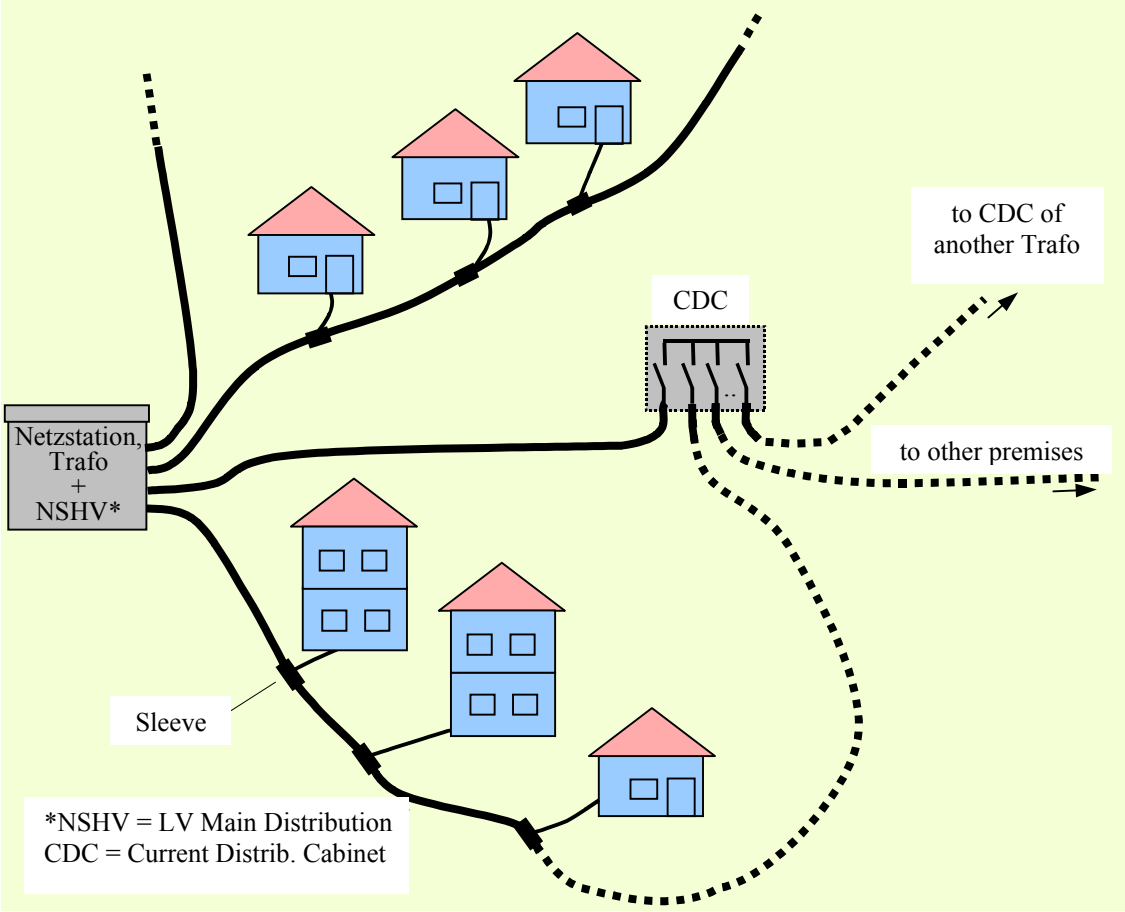

Figure 3.1.3-1: Usual Low Voltage Electricity Distribution Network in Germany.

The usual cables in German Access and In-House systems are of three different types: sector, non-metallic sheathed and flat-webbed wires (Figure 3.1.3-2). The lines leaving the LV transformer, as well as the connection lines from the sleeves to the premises (Table 3.1.3-1), are sector type with different cross sections. In-house wires are non-metallic sheathed or flat-webbed.

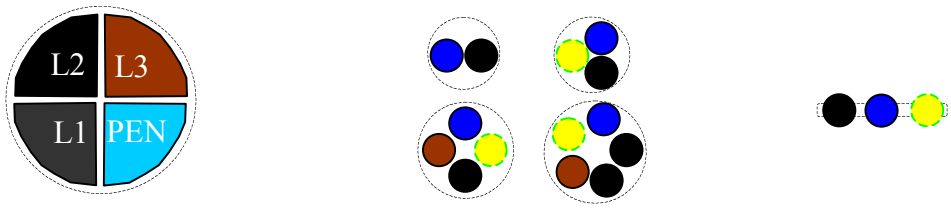

a) sector type
(e.g. NAYY-J 4x150 SE)

b) non-metallic sheathed
(NYM-type)

c) flat-webbed
(NYIF-type)

Figure 3.1.3-2: Cable Types mostly used in German Access and In-House Systems.

Table 3.1.3-1: Technical Data of the Lines shown in Figure 3.1.3-2

Type of Cable	Description	Characteristic Impedance	Attenuation in dB/km at 1, 10 and 20 MHz
NAYY-J 4 x 150 SE	4-wire underground main line (150 mm²)	22 Ω at 1 MHz symmetric mode	12.9 / 46.5 / 51
NAYY-J 4 x 50 SE	4-wire underground line to the premises (50 mm²)	29 Ω at 1 MHz symmetric mode	16.8 / 53.8 / 58.9
NYM-J 3G x 1.5	3-non-metallic sheathed wires (1.5 mm²)	75 Ω at 150 kHz	17 / 85.5 / 146
NYIF-J 3G x 1.5 NYIF-J 5G x 1.5	3-flat-webbed wires (1.5 mm²) 5-flat-webbed wires (1.5 mm²)	183 Ω at 150 kHz from line to next line	23 / 105 / 180

Sector type cables are optimal for symmetric mode signal transmission [34]. The PLT signal has to be injected onto the two phase conductors L1 and L3. Asymmetric mode signal transmission should be used in-house to get the signal to the most mains sockets; the PLT has to be injected between one or more phase conductors and the neutral conductor.

Some HF signal transmission characteristics of the usual German power lines for “last mile” PLT signal transmission are given in Table 3.1.3-1. The characteristic impedances are quite different because of various line geometries. The attenuation of Access cables is remarkably smaller than that of In-House cables.

Each sleeve in the Access system forms a special power line discontinuity responsible for HF radiation. From the electrical point of view the structure of the sleeve is relative simple as only four wires have to be connected as shown in Figure 3.1.3-3 (see also Figure 3.1.2.-1).

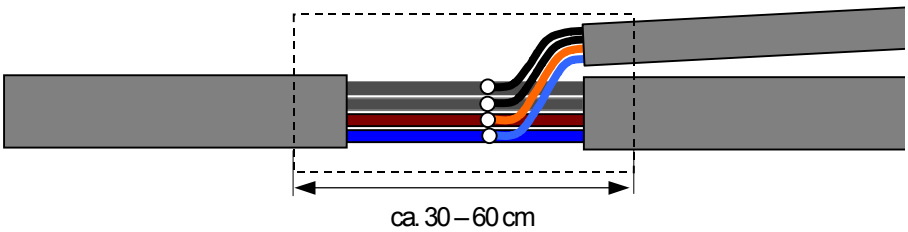

Figure 3.1.3-3: Sleeve for Power Line Distribution to the Premises.

3.1.4 In-House Systems

In this section is described how In-House PLT systems may be installed when Access PLT is used as the means of Internet access. Note, however, that In-House PLT can be used for in-house networking regardless of which method is used for Internet access.

The House Access Point (Figure 3.1.1-1) is the “interface” between the Access system and the In-House system. Figure 3.1.4-1 is an example of this point in case that two apartments have to be power supplied.

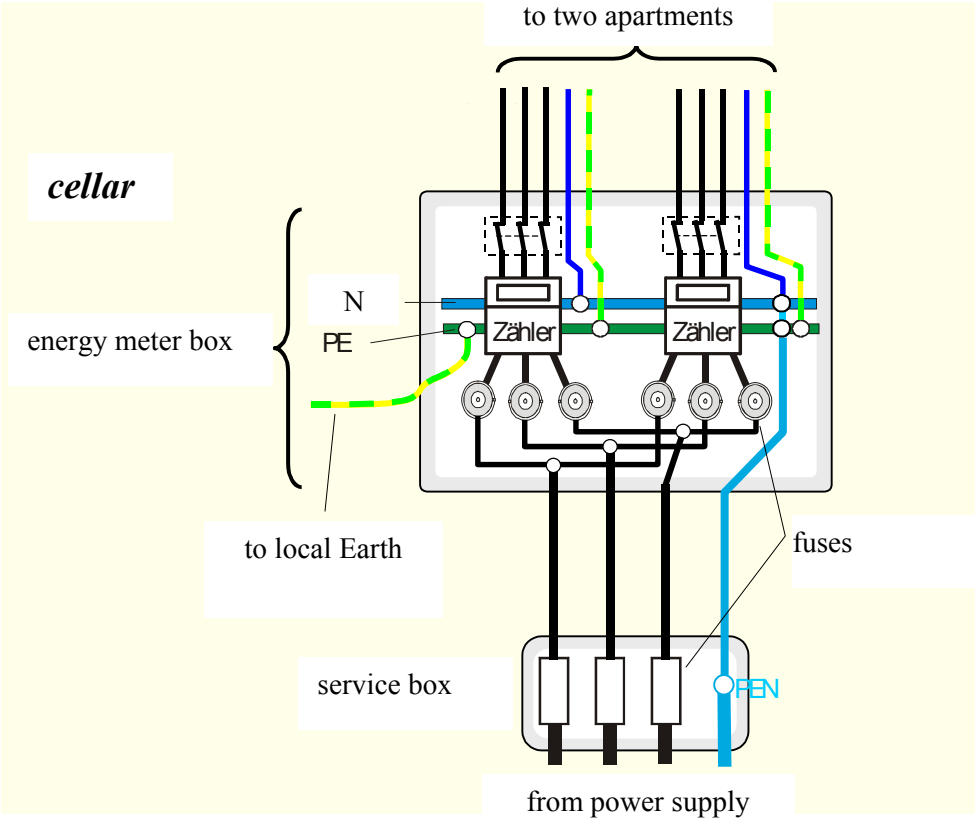

Figure 3.1.4-1: House Access Point in a House with 2 Apartments (Zähler = meter).

The main functions of the House Access Point are the junction of the Access underground cable to the in-house lines, the power distribution to different apartments, the energy meter for each apartment, the prevention of too high currents on the lines by fuses, the in-house separation of PE and N from PEN and the connection of PE to the local Earth (equipotential bonding).

Figure 3.1.4-2 in principle shows the complete in-house system of a house with two apartments, where for one apartment, the power distribution is shown in more detail.

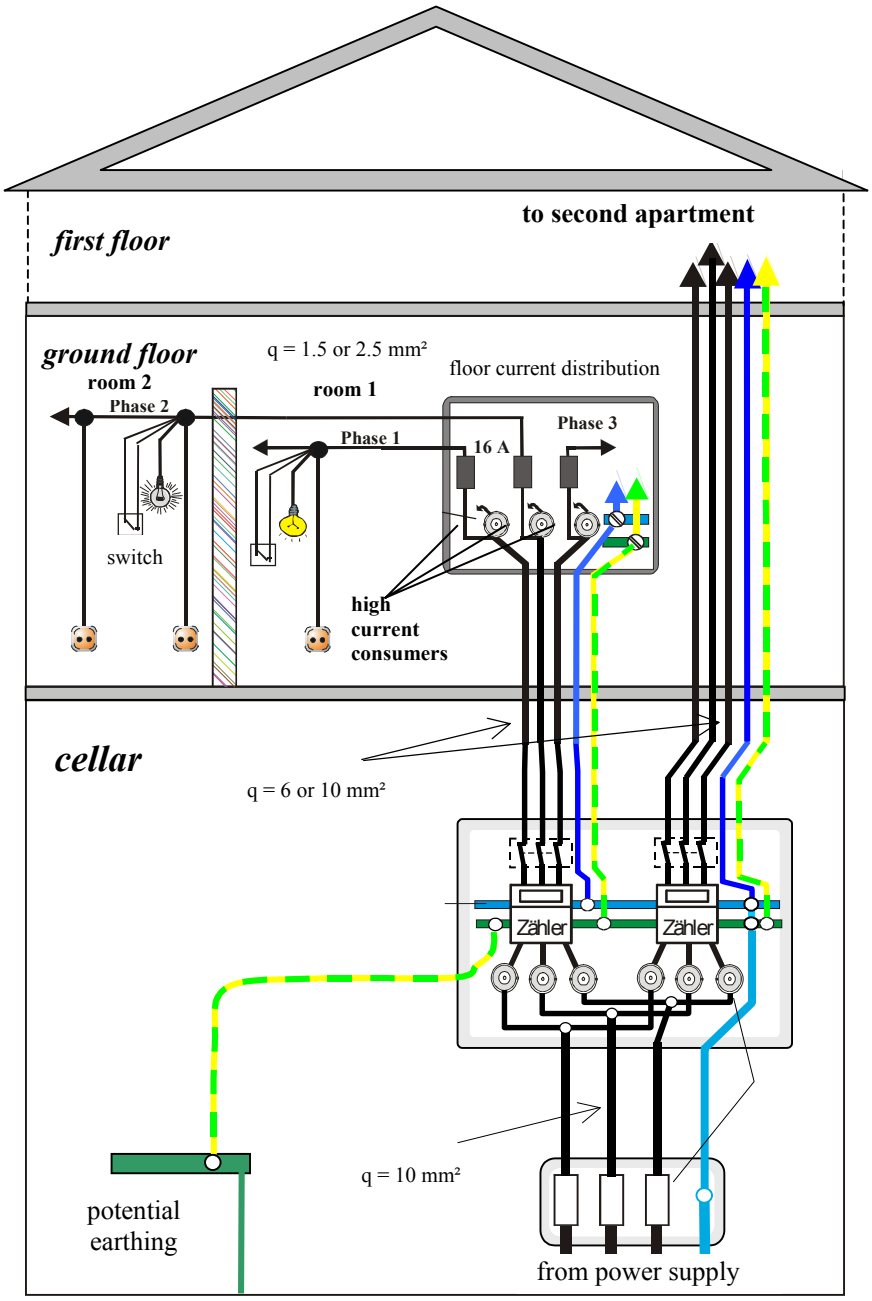

Figure 3.1.4-2: In-House Power Supply Installation (q: cross section).

From the central power distribution 5 lines (3 phases, N, PE) are going to each floor current distribution (apartment), where three lines (1 phase, N, PE) are further distributed to the single rooms of the apartment. The 3 phases are protected by fuses and should be distributed to all rooms of the apartment as equal as possible. Each room has one distribution box minimum; from here different lines are going to fixed installed consumers (e.g., lamps inclusive switches) as well as to wall plugs. High current consumers are supplied by 5 lines. All frames of the electrical loads are connected via PE to an earth connection. In most cases each apartment distribution additionally contains a fault-current circuit breaker; the sum of all currents (3 phases and N, normally about zero) is measured and breaks all circuits, when it deviates considerably from zero.

As lamp circuits considerably contribute to HF radiation when PLT is used they are specially mentioned here, and as an example two different often used lamp circuits are shown in Figure 3.1.4-3.

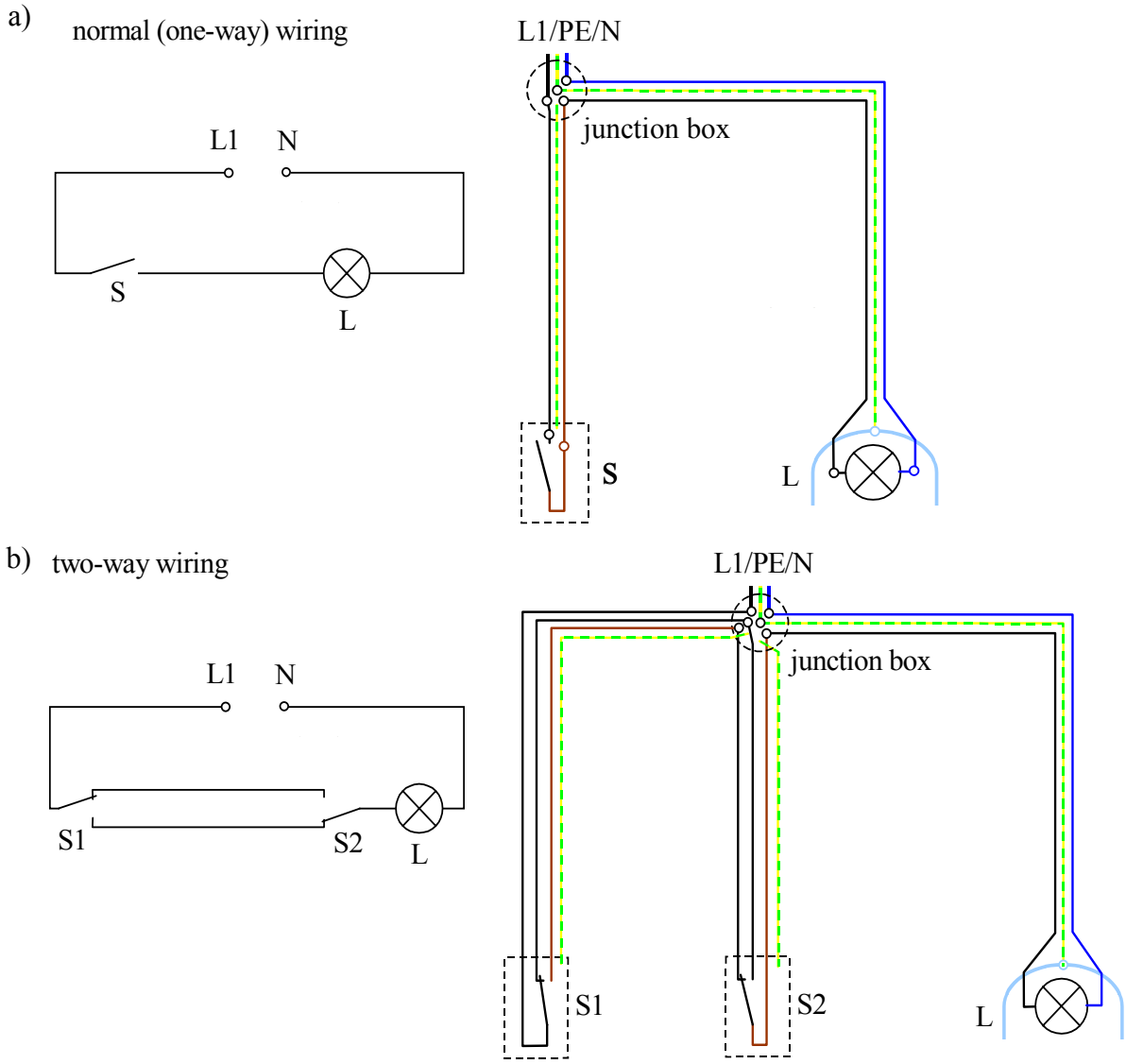

Figure 3.1.4-3: Lamp Circuits with One- and Two-Way Wiring.

In normal case (Figure 3.1.4-3 a)) only one on-off switch (S) is used. Then three wires (L1, PE, N) going to the lamp (L) and minimum two wires (L1, N) going to the switch are necessary. Sometimes an additional wall plug near to the switch is installed; then two more wires (N, PE) are used. When two switches (S1, S2, Figure 3.1.4-3 b)) are used, then a minimum of three wires going to each switch are necessary. The wiring to the lamp is the same as in the one-switch case. If more than two switches are used, then intermediate switches or even impulse relays are utilized (not shown here). Besides fixed lamp circuits shown here also mobile on-off switched electrical loads (stove, refrigerator, washer, percolator, PC equipment, etc.) plugged to mains sockets are in use. Here also one wire is switched; the wire may be Phase or Neutral, depending on the orientation of the plug.

3.1.5 Technical Characteristics with Respect to HF Radiation

PLT devices and the power lines that carry PLT signals have the potential to act as unintentional radiators. The amount of radiation depends on the symmetry of the network at radio frequencies. Symmetry is related to the difference in impedances between conductors and ground, where perfect symmetry corresponds to equal impedances. For a two wire line, if the impedance between each conductor and ground is equal, the line is symmetrical or balanced. A lack of symmetry leads to an unwanted, common mode signal. Common mode currents flow in parallel in both conductors, while return portions flow through ground. Balanced lines are necessary for differential mode transmission in which currents are equal in magnitude and flow in opposite directions on the signal conductors. The fields radiating from these conductors tend to cancel each other in the far-field area. On parallel or nearly parallel, non-concentric conductors, common mode currents at radio frequencies produce more radiation than differential mode currents [33].

PLT lines have poorer symmetry than xDSL lines and will also exhibit impedance discontinuities. Any impedance discontinuity in a transmission line, which may arise from a PLT coupling device, a transformer, a branch or a change in the direction of the line, may produce radiation directly or by reflections of signals forming standing waves that are radiated from the conductors. Even if the RF energy is injected into one of two or more conductors, the remaining wires generally act as parasitic radiators and, therefore, the lines can act as an array of antenna elements at certain frequencies. Radiation may come from one or more point radiators corresponding to the coupling devices, as well as one or more power lines [14].

It has also been recently discovered in Austria that PLT signals may induce higher emissions from mercury vapour street lamps in a broad range of frequencies spanning HF and up to 3 GHz. However, this issue is under further investigation [52].

3.1.6 Transmission Methods and Characteristics

A variety of PLT transmission systems with different characteristics exist, as PLT transmission methods have not been standardized by international bodies. Currently, it has been possible to identify systems using three substantially different modulation methods. All these methods are “modern” in the sense that they make quite efficient use of the spectrum, the transmitted power spectral density being more or less flat in the spectrum used for transmission.

Below, we briefly describe the principles of the different modulation methods used (for more details, the reader may consult any text book on Digital Communications) and some implications for interference with conventional usage of the HF radio spectrum.

3.1.6.1 OFDM (Orthogonal Frequency Division Multiplexing)

OFDM modulation is illustrated in Figure 3.1.6-1. The data is distributed over a large number of subcarriers, each modulated with a relatively low symbol rate R_s [symbols/s]. The frequency spacing between the subcarriers is approximately R_s [Hz], such that the spectra of adjacent subcarriers overlap. All the carriers can be modulated simultaneously in an efficient manner, using an IFFT. The overall transmitted spectrum can be changed relatively easy by using different amplitudes on different subcarriers, or by excluding some subcarriers altogether. This may be used to “silence” some frequencies if interference complaints are received, or to shape the spectrum to the most efficient shape (transmitting most power on high-SNR subcarriers). OFDM signals may exhibit large peak-to-average power ratios.

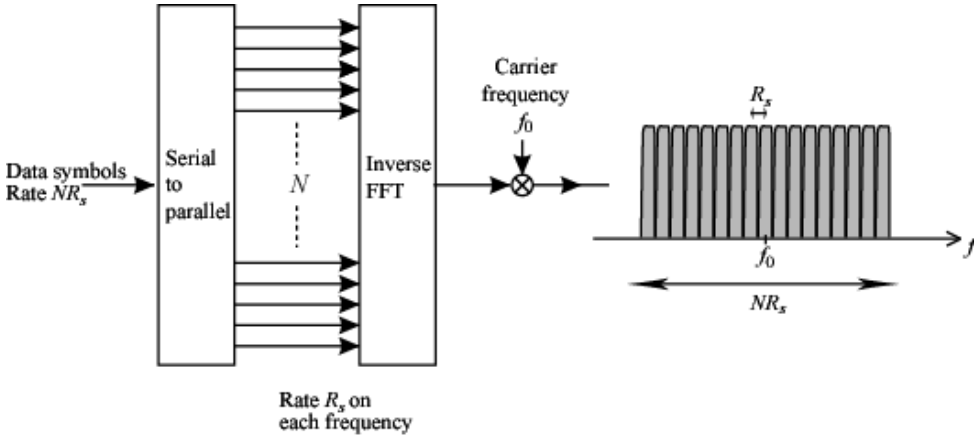

Figure 3.1.6-1: Principle of OFDM Modulation.

3.1.6.2 DSSS (Direct Sequence Spread Spectrum)

DSSS is illustrated in Figure 3.1.6-2. A signal modulated at a symbol rate R_s is spread out in frequency by multiplying with a spreading sequence at a much higher rate R_w. The total bandwidth of the modulated signal is hence approximately R_w, which is much higher than the minimum required bandwidth R_s. The benefits are that the power spectral density is decreased by a factor R_w/R_s due to the spreading, and that a number of users can share the same frequency band by using different spreading sequences. DSSS may still work if parts of the transmitted spectrum are "silenced" by use of notch filters; the information is spread out in the entire band and can still be detected after correlating with the spreading sequence in the demodulator. The peak-to-average power ratio of DSSS is smaller than for OFDM.

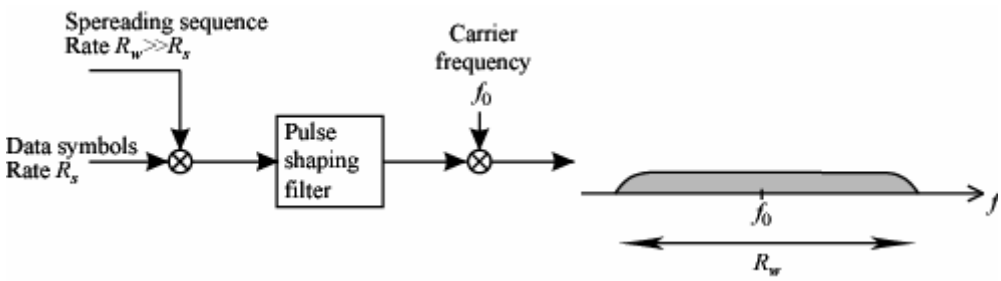

Figure 3.1.6-2: Principle of DSSS Modulation.

3.1.6.3 GMSK (Gaussian Minimum Shift Keying)

Frequency shift keying with the smallest possible modulation index (frequency shift relative to symbol rate) is called MSK (Minimum Shift Keying). MSK can also be viewed as a special case of phase modulation, where the phase is obtained by integrating the filtered input signal (this is a common practical implementation of MSK). In GMSK, illustrated in Figure 3.1.6.-3, the pulse shaping filter has a Gaussian impulse response. GMSK is well known as being the modulation scheme used in the GSM cellular system. The total bandwidth of the modulated signal is approximately equal to the input bit rate R_s. The peak-to-average power ratio is small, since only the phase of the modulated signal carry information. There is little freedom in shaping the transmitted spectrum in GMSK; a notch within the transmitted spectrum would put severe requirements on the equalizer in the demodulator.

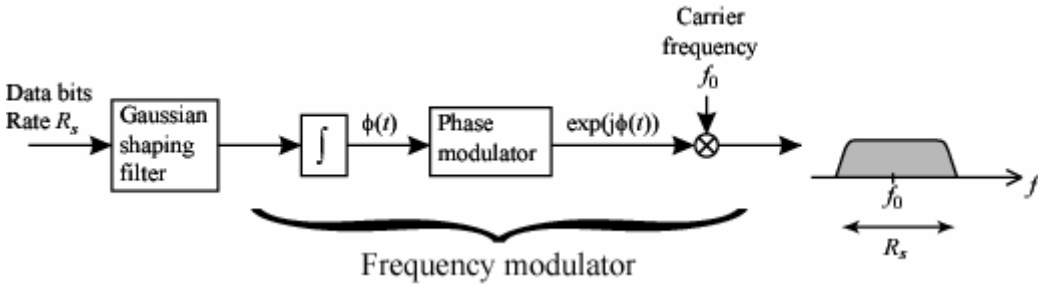

Figure 3.1.6-3: Principle of GMSK Modulation.

3.1.7 PLT Systems in Use

The information we have been able to obtain on different PLT systems is summarized in Table 3.1.7-1. We have observed that even though GMSK as well as DSSS were used in earlier PLT systems and trials, systems currently available (October 2006) seem to be exclusively based on OFDM.

Table 3.1.7-1: Characteristics of PLT and xDSL Systems in Use

	Frequency range	*"Protected" frequencies*	*Injected PSD (dBm/Hz)*	*Modulation method and parameters*
In-house PLT systems				
ASCOM (2001 info) -discontinued	18.8-26.2 MHz	20.8-21.4; 23.4-24.2	< -72 (-4dBm, 6 MHz BW)	GMSK, 3 carriers, 2.5Mbps each, time-division duplex
ASCOM (2002 info) -discontinued	18.8-26.2 MHz	20.8-21.8; 23.8-24.2	< -72	GMSK, 3 carriers, 1.0Mbps each, time-division duplex
Current Technologies	2-34 MHz	Not specified	-58	OFDM, up to 1536 carriers, up to 205 Mbps
Main.Net DSSS - discontinued	4-25 MHz			DSSS
Main.Net OFDM	1.7-30 MHz	Not specified	Adaptive	Adaptive OFDM
HomePlug 1.0	4.3-21 MHz	Amateur bands	< -50	OFDM w/DQPSK, 84 carriers, 14 Mbps
HomePlug AV	2-28 MHz	Amateur bands	< -50	OFDM, PSK/QAM, 917 carriers, 200 Mbps
DS2 chipset	Programmable	Programmable		OFDM, 1280 carriers
Access PLT systems				
ASCOM (2001 info) -discontinued	1.4-11.8 MHz	3.4-3.8; 5.8-7.2; 9.4-9.8	< -66 (+2dBm, 6 MHz BW)	GMSK, 3 carriers, 2.5Mbps each, time-division duplex
ASCOM (2002 info) -discontinued	1.4-11.8 MHz	3.4-3.8; 5.8-7.2; 9.4-9.8	< -66	GMSK, 3 carriers, 1.0Mbps each, time-division duplex
Current Technologies	2-34 MHz	Not specified	< -50	OFDM, up to 1536 carriers, up to 205 Mbps
Main.Net DSSS - discontinued	4-25 MHz			DSSS
Main.Net OFDM	1.7-30 MHz	Not specified	Adaptive	Adaptive OFDM
HomePlug BPL - under development				
DS2 chipset	Programmable	Programmable	-74 to -50	OFDM, 1280 carriers
Amperion (North America)	3.75-48.75 MHz	Programmable	Adjustable	OFDM, 24 Mbits/sec, 2.5/4 MHz Bandwidth
Opera Technology Specification	10,20 or 30 MHz BW	Refers local regulations	Refers local regulations	OFDM w/ trellis-coded ADPSK, 1536 subcarriers, up to 205 Mbps
xDSL systems				
ADSL	Below 1.1 MHz			
ADSL2	Below 1.1 MHz			OFDM w/ trellis-coded QAM, 4 kbaud, 4312.5 Hz tone spacing
ADSL2+	Below 2.2 MHz			OFDM w/ trellis-coded QAM, 4 kbaud, 4312.5 Hz tone spacing
ADSL2++	Below 4.4 MHz			OFDM w/ trellis-coded QAM, 4 kbaud, 4312.5 Hz tone spacing
SDSL	Below 0.5 MHz			
HDSL	Below 0.5 MHz			
VDSL	Below 12 MHz	Amateur bands	<-53 (-60?) (-56?)	OFDM w/ adaptive QAM, 4 kbaud, 4312.5 Hz tone spacing

Ascom (http://www.ascom.com) had pilot systems in 2001 – 2002, using 3 GMSK-modulated carriers, below 12 MHz for Access systems and above 18 MHz for In-House systems. Later, Ascom has discontinued its PLT operations.

Current Communications (http://www.currentgroup.com) acquired the PLT assets of Ascom in 2006, forming the subsidiary Current Technologies (http://www.currenttechnologies.ch/). They deliver OFDM-based Access system, offering data rates up to 205 Mbps.

Main.Net (http://www.mainnet-plc.com) delivers systems called Plus ("Power Line Ultimate System") for Access, as well as In-House networks. Earlier, their systems were based on DSSS technology [36], but they now offer products based entirely on OFDM.

Other PLT vendors are providing equipment built around the DS2 chipset (http://www.ds2.es). This is a flexible chipset based on OFDM modulation, with up to 1280 subcarriers. The frequency ranges used, and notches to protect certain frequencies from interference, are programmable.

Even though power line transmission technology has not yet been standardized by international bodies, a group of vendors called the HomePlug Powerline Alliance (http://www.homeplug.org) has agreed on a common industry standard for In-House PLT, HomePlug 1.0 [47]. These systems use OFDM modulation, obtaining an overall data rate of 14 Mbps. The Alliance finalized a new specification called HomePlug AV [48] in August 2005, designed specifically for in-house entertainment applications (e.g., home theater) and supporting a theoretical data rate of 200 Mbps, which would translate to a real-world speed of 70 – 120 Mbps. Products using this technology (e.g., Intellon chips) have been available since early 2006 [27]. These systems will also use OFDM modulation. Finally, the Alliance has recently started work on a specification for Access systems, called "HomePlug BPL".

Other groups working on standardizing PLT systems include the Open PLC European Research Alliance (OPERA) and IEEE P1675. IEEE P1675 focus on other issues than modulation/signalling format or EMC [38], and are hence not considered further here. OPERA has published a technical specification for OFDM-based Access PLT systems [51]. Among the systems investigated above, Current Technologies seem to be the only one employing parameter combinations (number of subcarriers, bandwidths and maximum data rate) found in the OPERA specification, giving a strong indication that they adher to the specification.

Detailed overviews of PLT systems available in 2004 and in 2006 can be found in [56] and [38], [76], respectively.

3.1.8 Example of an Access PLT System

In this section we describe the Amperion Access PLT system used in North America, as an example.

The system consists of three basic blocks. These are the injector, the extractor and the repeater/extractor. While these components are modified depending upon whether the application is for underground or overhead wiring, they perform the functions detailed below.

The Injector is the interface between the network access. Typically, one injector is installed per MV feeder. Once on the wire, the signal is either repeated to extend its reach or extracted to the customer. The Extractor is the device that connects the PLT network to the destination.

The Repeater/Extractor provides both extractor and repeater functionality. It fully receives a signal sent from an injector (or another repeater), error corrects for the noise, decodes the IP datagram, routes the packet and retransmits the packet down the MV feeder.

Spacing is dependent upon the desired bandwidth, application, noise on the line and whether latency is within voice-fidelity limits.

The interface from the MV lines to the customer premise is via a 2.4 GHz (IEEE 802.11b) wireless link. A typical system showing the integration of all the components is shown in Figures 3.1.8-1 and 3.1.8-2 below.

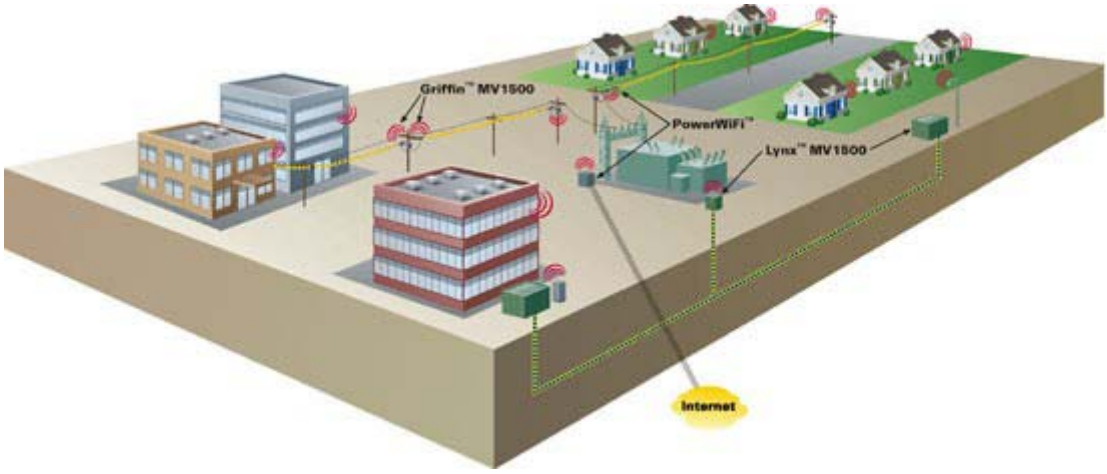

Figure 3.1.8-1: Integrated Amperion System.

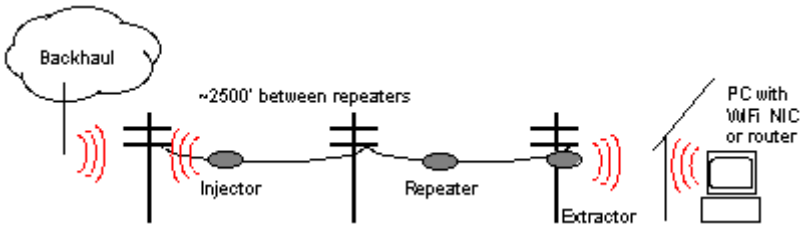

Figure 3.1.8-2: Amperion Overhead System Customer Termination.

A conceptual representation of the injection and extraction method is shown in Figure 3.1.8-3.

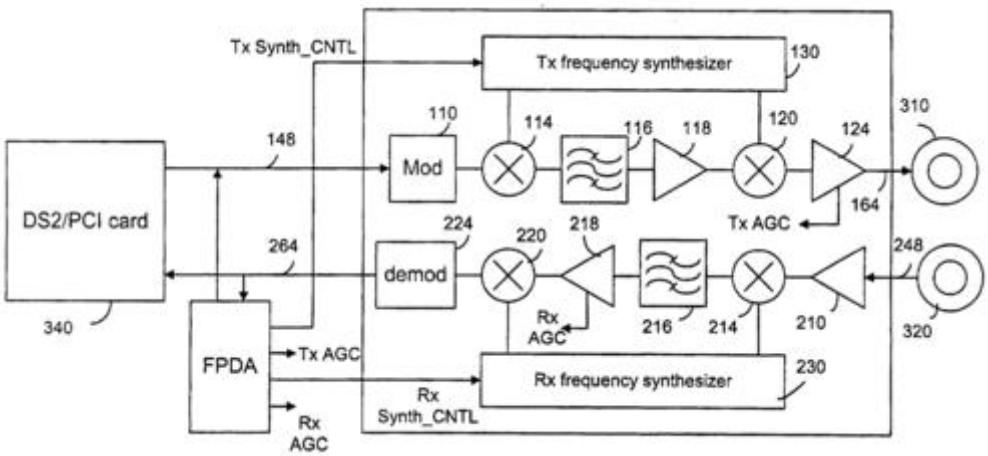

Figure 3.1.8-3: Amperion Injector/Extractor.

The injected signal at the point labelled 310 has a frequency range of 3.75 MHz to 48.75 MHz and an emission width of 2.75 MHz. The signal extracted at the point labelled 320 has a frequency range of 9.8 MHz to 47.8 MHz and an emission width of 3.75 MHz.

This system is frequency agile within the bounds mentioned. The modulated emission is Orthogonal Frequency Division Multiplexing. The OFDM signal comprises 1280 carriers with 1.1 kHz spacing. The downstream spectrum has 768 carriers and occupies a 3.75 MHz bandwidth. The upstream spectrum comprises 512 carriers with a 2.75 MHz bandwidth. The individual carrier components within the emission may be suppressed in order to provide interference mitigation.

The system is also capable of power agility with the maximum power spectral density of the order of –50 dBm/Hz. Over a majority of the PLT frequencies the transmitter only couples 5 to 10 dB less power than the transmitter is capable of. Typical transmitters will couple –60 to –55 dBm/Hz average power spectral density to the electrical line. The value of –60 dBm/Hz represents 25 nanowatts contained within a 2.5 kHz (nominal allocation for communication below 30 MHz) voice channel.

3.2 TRANSMISSION ON TELEPHONE LINES (xDSL)

The term xDSL covers various types of Digital Subscriber Line technology including Asymmetric DSL (ADSL) and Very high-speed DSL (VDSL). ADSL typically uses frequencies up to 1.1 MHz (special versions up to 4.4 MHz) whereas VDSL may use frequencies up to 30 MHz. ADSL provides a link from customers' premises all the way to the local telephone exchange, but VDSL only links customers' premises to an intermediate Optical Network Unit (ONU) up to 1 km away.

This section gives an overview of the telephone network environment that the xDSL systems operate in. Some important factors to consider in the Access network are: type and quality of the wires, length distribution of the wires, network topology and special impairments like bridged taps [35].

As the deployment of the telephone network has taken place over a very long time the quality and topology of the network differ greatly between different countries and between different regions within the country. Generally the quality of the network is much better in countries that developed their telephone systems later; the average length of the wires is shorter and the transmission characteristics are often found to be better. For example, the average length of the wires is shorter in most European countries than in the USA. The median length of the wires in the Access network in Germany is around 1700 m, in Sweden 1500 m, in Italy around 1200 m and in the USA approximately 2200 m. The length of the wire is a very important factor since a longer wire attenuates the signal more, resulting in lower bit rate capacity. Other important properties of the wires that determine the transmission characteristics are: dimension (gauge), isolation material (paper, PVC, polyethylene) and type of twisting. Some older telephone networks can have untwisted wire-pairs (also called flat twist), but modern Access networks generally consist of unshielded twisted-pair copper wires. Twisted-pair wires are less susceptible to crosstalk and to other types of interference.

3.2.1 Telephone Line Systems

Figure 3.2.1-1 shows the topology of a usual metallic Access network, where all telephone lines start at a Central Office (CO) or a smaller local exchange. A large CO can serve over 100000 customers; in Germany the mean number of customers is 5000. The big feeder cables emanate from the CO. As the network spreads out, the big cables branch off into smaller and smaller cables. At some junctions in the network there are so-called Cross-connection Points (CPs), where cross-connections between wires in the larger feeder cables and the smaller distribution cables can be made. The cross-connection points often reside in small street cabinets and are known by many names, such as a serving area interface, a flexibility point, or a

crossbox, etc. The gauge of the cables often changes in a cross-connection point, where smaller gauges are used closer to the customer premises. Most of the network is buried underground, especially the larger feeder cables, but overhead wires can also exist and they are more common further out in the network closer to the subscribers. However, buried wires are preferred since aerial wires are most susceptible to ingress noise and more likely to create egress problem.

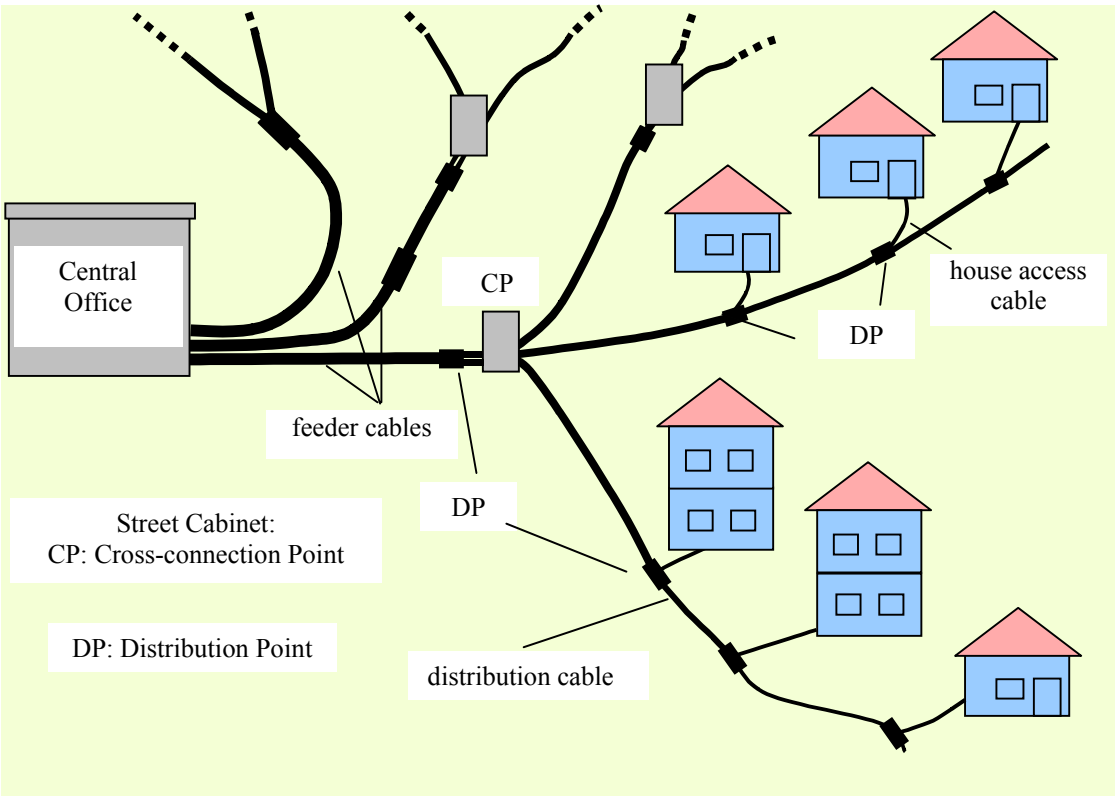

Figure 3.2.1-1: Typical Telephone Access Network.

Special types of impairments present in some Access networks are so-called bridged taps. A bridged tap is an unterminated line-segment that is spliced onto the telephone line at a Distribution Point (DP). This was made before, to allow reconfiguration of the network (disconnecting some and reconnecting other subscribers) if service demands would appear at other locations. Bridged taps are usually located closer to the customers than the central office and they are more common in North America than in Europe. It is estimated that up to 80% of the lines in the USA have bridged taps, but they can exist in Europe as well. If we consider the indoor wiring at the customer's premises as part of the Access network (which is the case with a splitter-less DSL system), practically all lines have bridged taps. The effect of bridged taps on a VDSL signal is explained in Section 3.2.2.

In Germany the feeder cables from the CO to the CPs are on average 1400 m long and consist of up to 2000 wire-pairs. One cable feeds six to ten CPs. Each distribution cable is on average 300 m long, contains up to 100 wire-pairs and runs from the street cabinets to the customers' premises. Each house Access cable is branched off the distribution cable at a Distribution Point by means of a cable jointing sleeve. It contains 10 to 20 wire-pairs, dependant on the number of apartments in the house and ends at the pedestal, inside or outside the building. Special wiring cables are running from the pedestal to each apartment, where the customer's telecommunications network begins. The average wire-pair lengths in the customers' building are 30 m.

The lines used for xDSL are generally symmetrical twisted pairs. Each customer has its own line up to the central office. Usual diameters of the single wires are 0.35 mm, 0.4 mm, 0.5 mm, 0.6 mm and 0.8 mm. Different types of lines and cables are used. Figure 3.2.1-2 shows the conductor arrangements in a few of them. Twin twisted wires are used as jumper wires. In telecommunication lines and cables often two twin wires are combined to a star quad to get high packing density. Since thirty years, trunking of telecommunication lines is typical: star quads are the elements. Five star quads are combined to a trunk element. The cable shown in Figure 3.2.1-2 contains ten such trunk elements.

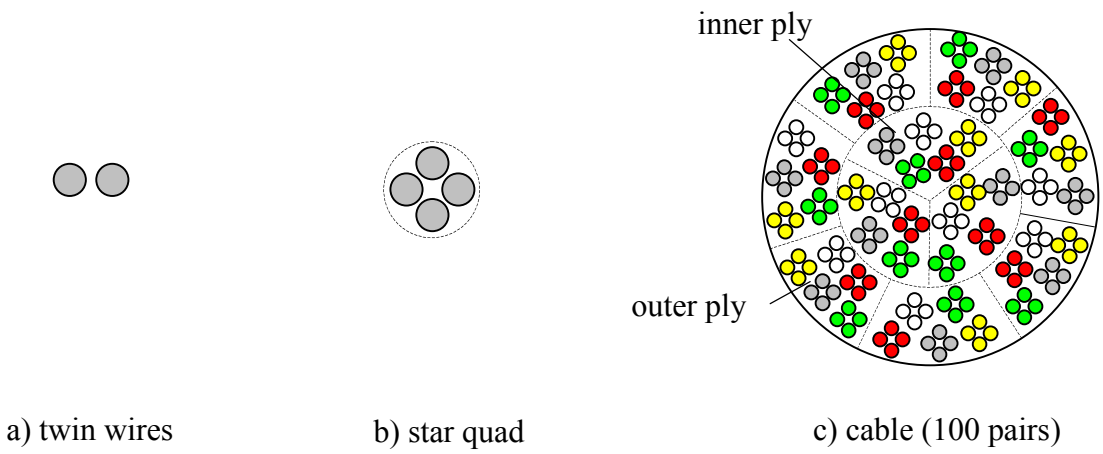

Figure 3.2.1-2: Conductor Arrangements in Telecommunication Lines and Cables.

The feeder and distribution cables differ in protection against humidity. The feeder cables are hermetically sealed and monitored by compressed air while the distribution cables are filled with a special gel. By that both cable types have about 15% different attenuation.

Table 3.2.1-1 shows technical data of some telecommunication lines of the telephone Access network used for xDSL. The characteristic impedance of usual lines at 1 MHz is between 110 Ω and 145 Ω; at higher frequencies it is slightly lower. The attenuation depends on wire diameter and on material for protection against humidity.

Table 3.2.1-1: Technical Data of Some Telecommunication Lines

Type of Line/Cable	Description	Characteristic Impedance at 1 MHz	Attenuation in dB/km at 1, 10 and 30 MHz
A-2YF(L)2Y 100 x 2 x 0.4	distribution cable (100-pairs) 0.4 mm	136 Ω	19.4 / 60.7 / 111.5
A-2YF(L)2Y 100 x 2 x 0.6	distribution cable (100-pairs) 0.6 mm	138.5 Ω	13 / 41.3 / 77
I-YY 10 x 2 x 0.6	indoor cable, 10-pairs (PVC) 0.6 mm, originally only for POTS		22 / 88.3 / 179
	twin wires	ca. 114 Ω	

Next the elements of the telecommunications Access network are described which remarkably contribute to wave reflections and thereby to HF radiation (Figure 3.2.1-3). In the central office the xDSL two wires line starts with a modem, going through a DSL Access Multiplexer (DSLAM), splitter (separation of high frequency DSL signal from lower frequency analog and digital telephone signals), then going to the Main Distribution Frame (MDF). There the line is connected to a distribution cable (e.g., cable c) in Figure 3.2.1-2) by use of twisted twin wires. The distribution cable is combined with other ones in the cable cellar of the CO to a feeder cable by use of a sleeve.

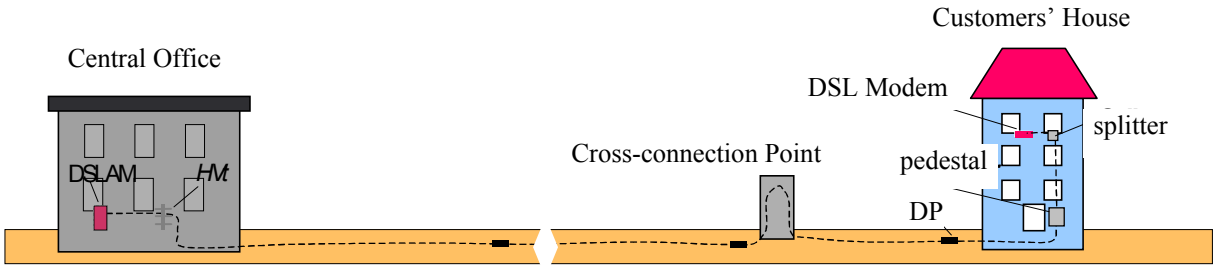

Figure 3.2.1-3: xDSL Line (Telephone Access Network).

At the Cross-connection Point (see Figure 3.2.1-1) the feeder cable is distributed to some distribution cables and eventually to another feeder cable. Figure 3.2.1-4 shows the basic construction of the Cross-connection Point inside a street cabinet. Shortly before entering the cabinet the feeder cable by sleeves is distributed to short cables with max. 100 pairs each. The termination of each short cable is contacted to the inputs of switchboards. The metallic base of each termination is fixed to the metal frame and thereby combined with the local cabinet earth. The cabinet is nearly full of switchboards and also shows the twin wires for connecting the incoming lines with the lines going to the customers.

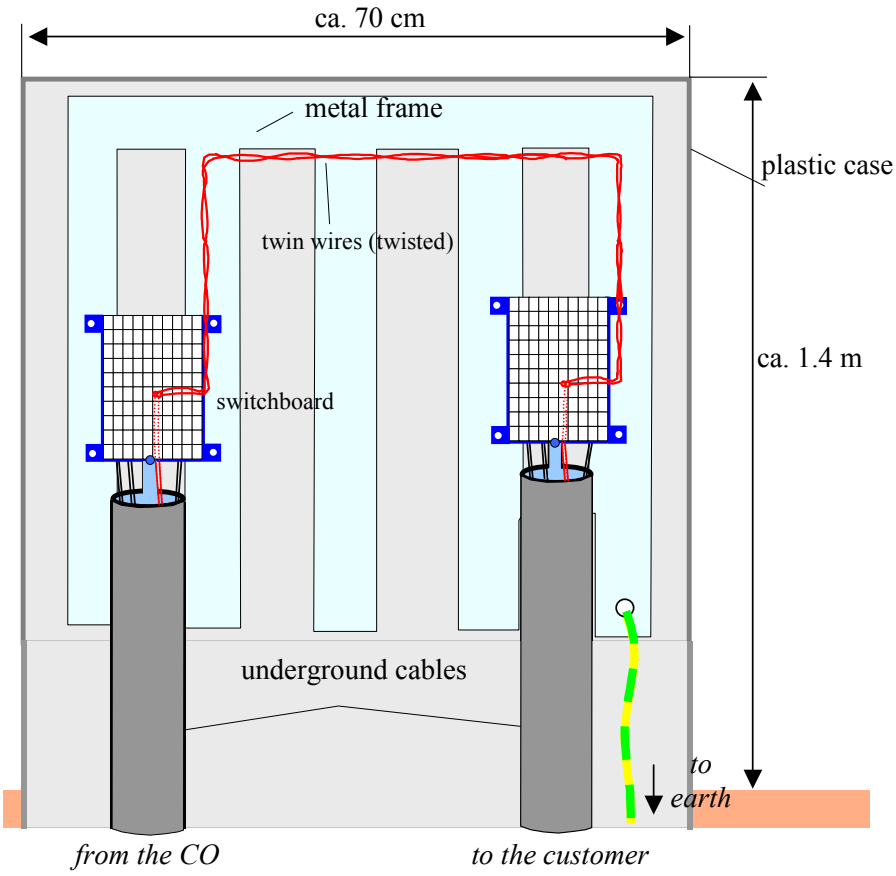

Figure 3.2.1-4: Basic Construction of a Cross-Connection Point.

Figure 3.2.1-5 is a photo of an open door street cabinet.

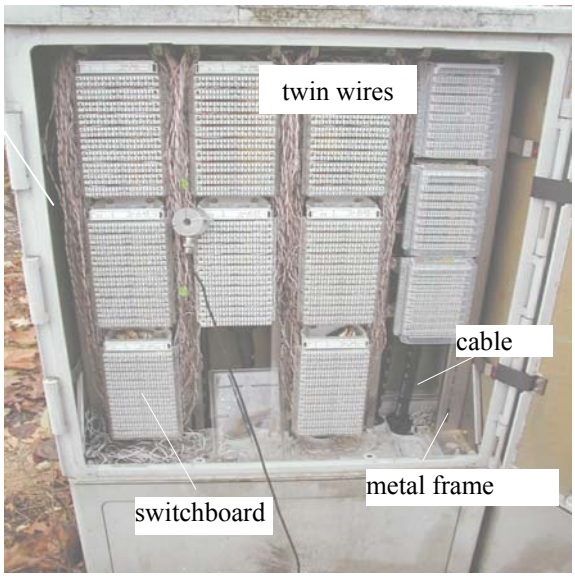

Figure 3.2.1-5: Photo of a Cross-Connection Point inside a Street Cabinet.

The next basic elements of the distribution cables (Figure 3.2.1-1) are sleeves at the DPs. They are used for jointing or distributing cables. Figure 3.2.1-6 is a basic representation of branching off a customer line from the a distribution cable. Important are the realisation of uninterrupted cable shield, as well as the protection of the wires against humidity.

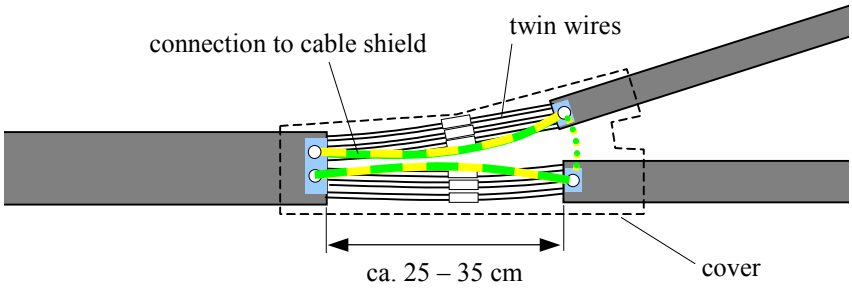

Figure 3.2.1-6: Scheme of Telephone Line Branching Off by a Sleeve.

The house access point is mounted inside or outside the house, usually in the cellar or ground floor. The basic construction of the pedestal with the house Access cable ending is shown in Figure 3.2.1-7. The twin wires at the end of this cable are connected with the different In-House telecommunication lines, one for each apartment (here only one). The cable shields as well as the local earthing system may be connected to the earth bar, but only a small part of the German pedestals do so. Modern in-house telecommunication lines contain several wire pairs, while older ones are star quads (Figure 3.2.1-2) or even twin wires.

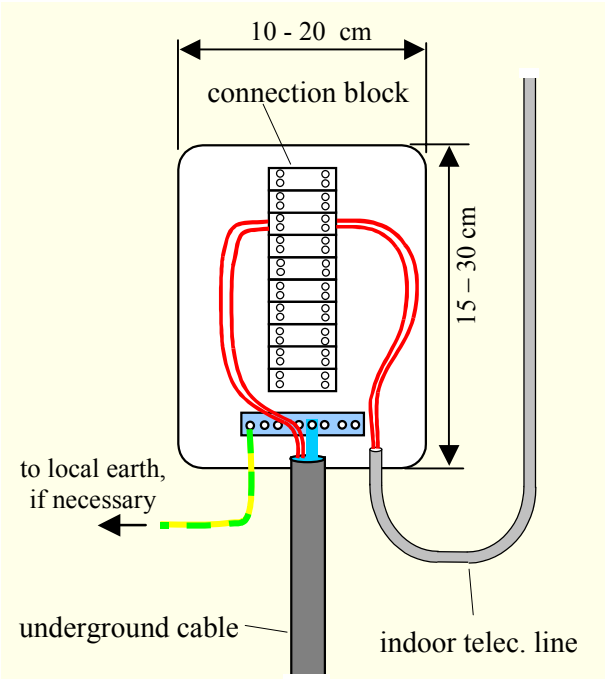

Figure 3.2.1-7: House Access Point (HAP) for Telephone Lines.

Figure 3.2.1-8 shows a typical phone line house installation with one phone jack (1st TAE) for connection of the customer's equipment. Up to three analog devices may be connected (telephone, fax, modem,

telecommunications device, …). ISDN customers need a special network terminator basic interface (NTBA) for connection of a telecommunications device or other different terminals by use of a bus. DSL customers additionally need a splitter, a passive filter with 130 kHz limiting frequency to separate the high frequency DSL signals from the low frequency POTS- and ISDN-signals.

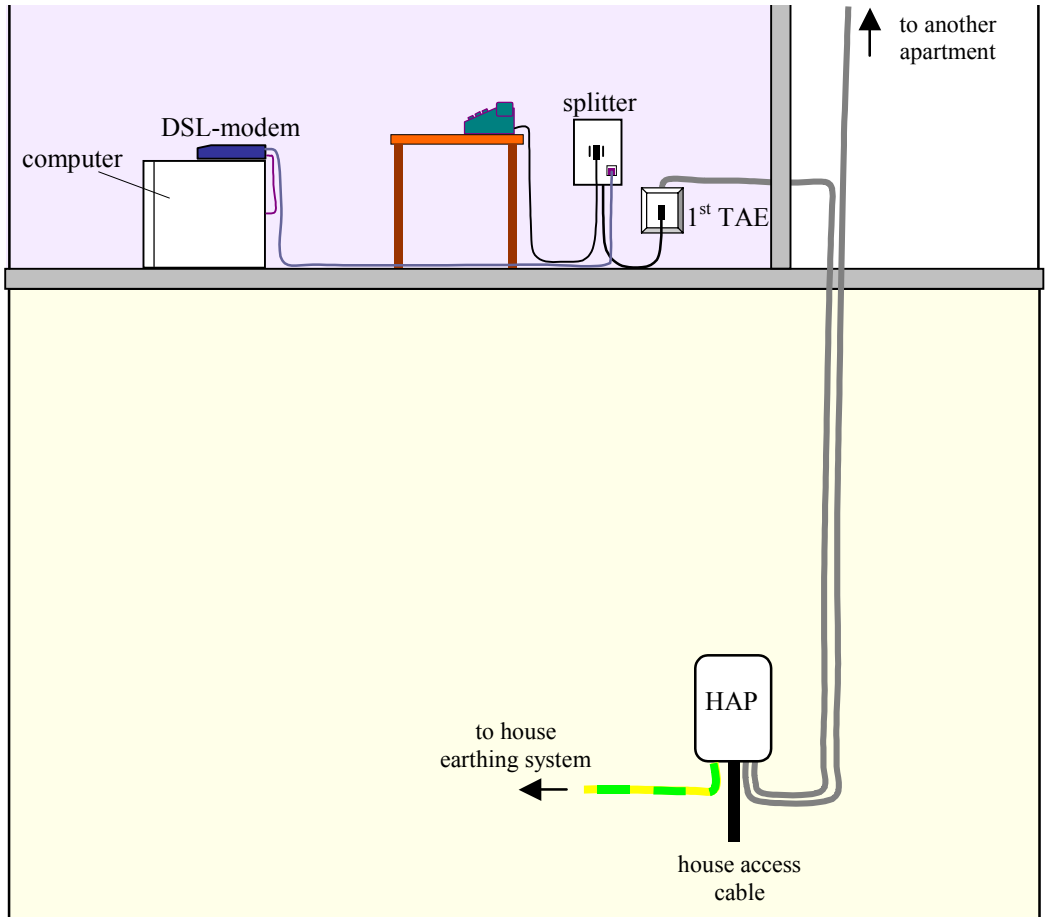

Figure 3.2.1-8: Simple House Installation with xDSL Access.

3.2.2 Technical Characteristics with Respect to HF Radiation

Theoretically symmetrical signal transmission on twisted-pair wires does not produce any radiation, but real telephone lines are not completely symmetrical. This is characterised by the so called asymmetric divergence: the higher the asymmetric divergence, the better is the symmetry of the signal transmission system and the lower is the signal emitted.

The asymmetric divergence of wire-line telecommunication networks contributing to signal emission may be defined, for example, by the Longitudinal Conversion Loss (LCL). LCL defines the amount of a symmetrical input voltage being converted to an asymmetrical voltage downstream, leading to signal radiation. LCL = 0 dB equals the characteristics of an infinitely bad cable pair, while LCL = 60 dB represents a good quality twisted pair.

Measurements in the HF range at several 100 m long 100 pair telephone cables with different wire diameters between 0.35 mm and 0.6 mm showed LCLs between 25 dB and 75 dB and median values between 38 dB and 50 dB [53]. Using the LCL for assessment of radio emission is applied only for

telecommunication networks (not for PLT networks) because of the remarkably better electrical characteristics of their wire-lines and only for frequencies below resonance.

Causes for a low LCL may be discontinuities in wire diameter, twisting and distance to the cable screening along the wire-line. More important causes are impedance mismatches at different points along the line, such as Distribution and Cross-connection Points, Bridged Taps, House Access Points and within the house installation. The main factors affecting the level of radio emission are the imbalance of the customer's premises wiring and the DSL signal power injected into it. The house installation itself forms an efficient antenna for radiation of the common mode signal parts produced within the telephone line network, especially when its lines have resonant lengths of $\lambda/4$ or multiples thereof.

3.2.3 DSL Basics

The premises of DSL technology are that a copper wire can carry a wide range of frequencies well into the MHz range, with limitations only due to the physical characteristics of the wire, allowing data rates in the Mbps range.

Although a few MHz of frequencies can be transmitted on the cables, only frequencies in the range of 0 to 4000 Hz are used by telephone lines for voice communications; the rest of the frequencies are not used. It is these unused frequencies that xDSL exploits for Broadband Technology. xDSL Access technologies deploy either OFDM (*Orthogonal Frequency Division Multiplexing*) or *Echo-Cancelling* techniques to transmit and to receive data on a pair of copper wires. The Echo Cancelling technique not only requires sensitivity of Transmitter and Receiver to signals deemed useful, but also requires advanced digital signal processing (DSP) circuitry to achieve good results and is therefore not popular. It is most often superseded by OFDM wherein the entire available frequency bandwidth is divided into three or more frequency bands. Based on the upstream and downstream speeds, bit-rate, symmetry factor and number of copper pairs used, xDSL is classified as in Table 3.2.3-1. The transmission rates are a function of the thickness and the distance of the copper wire being used [75].

Table 3.2.3-1: xDSL Classification

xDSL	Upstream	Downstream	Symmetry	Copper Pairs
ADSL	~640 kbps	~2 Mbps	Asymm.	1
HDSL	~1.544 Mbps	~1.544 Mbps	Symm.	2
HDSL2	~1.544 Mbps	~1.544 Mbps	Symm.	1
SDSL	~1.544 Mbps	~1.544 Mbps	Symm.	1
VDSL	~2.3 Mbps	~52 Mbps	Asymm.	1

3.2.4 xDSL Systems in Use

xDSL transmission is standardized by international bodies like ITU-T, ANSI and ETSI. Information on different xDSL systems is summarized in Table 3.1.7-1. SDSL, HDSL, SHDSL, ADSL and ADSL2 systems are all constrained to frequencies below the HF range, and have therefore not been studied in detail by this RTG. The ADSL family is, however, expanding into the HF range through the extensions ADSL2+ and ADSL2++. VDSL systems are using large portions of the HF band.

ADSL2 (ITU-T G.992.3) [16] is an improvement to ADSL using the same frequency range (below 1.1 MHz), where data rates have been increased by using trellis-coded QAM (quadrature amplitude modulation) on each subcarrier. The frequency spacing between subcarriers is 4312.5 Hz, and the symbol rate on each subcarrier is 4000 symbols/s. ADSL2+ (ITU-T G.992.5) [17] is a further extension of ADSL2, using twice as many subcarriers to double the data rate. The frequency range used is hence up to 2.2 MHz. Doubling the number of subcarriers once more gives ADSL2++, using frequencies up to 4.4 MHz.

VDSL (ANSI T1.424, ITU-T G993.1) [49] uses frequencies up to 12 MHz. QAM is used on each subcarrier, and the frequency spacing and symbol rate is the same as in the ADSL2 family, while the number of subcarriers is much larger. Annex 6 of reference [49] describes an extension where the data rate is doubled by doubling the symbol rate and the subcarrier frequency separation, while maintaining the same number of subcarriers. The frequency range used is then up to 24 MHz. An upgrade of the VDSL standard, VDSL2 (ITU-T G.993.2), also exists [93]. This standard includes several options for operation modes and band plans, some of them extending up to 30 MHz. As of February 2006, the band plans for Europe and North America are constrained to below 12 MHz, while band plans for Japan extend to 30 MHz.

According to reference [43], “most telcos have already deployed ADSL2+ in 2005 while VDSL is attracting less attention, but is likely to see more significant deployments in the 2006 to 2008 timeframe”. For example, the systems currently (October 2006) offered in Norway are only ADSL (up to ADSL2+, 16 Mbps), and SHDSL (Symmetric HDSL, up to 8 Mbps). According to Reference [37], in September 2005, there was widespread VDSL deployment in Korea and Japan only. In Germany T-Com (part of the Deutsche Telekom) realised VDSL2 (second generation) pilot systems in Hamburg, Hannover and Stuttgart [74]. In ten German cities, 50% of the households (2.9 million) are expected to be VDSL-capable up to mid 2006, and 90% (6 million households) up to the end of 2006.