Chapter 2 – BACKGROUND: EVOLUTION OF SYSTEM INTEGRATION

The system of systems consideration and integration of different systems in vehicle design have a history. There are discussed the historical evaluation of systems integration including man-machine systems, fly-by-wire systems and other examples.

2.1 HUMAN-MACHINE INTEGRATION

One of the bright examples of system integration experience was integration of man and machine in manual control tasks. The main components of this system (see Figure 2.1) are: display, human-operator (pilot, helmsman, driver), manipulator, controlled element.

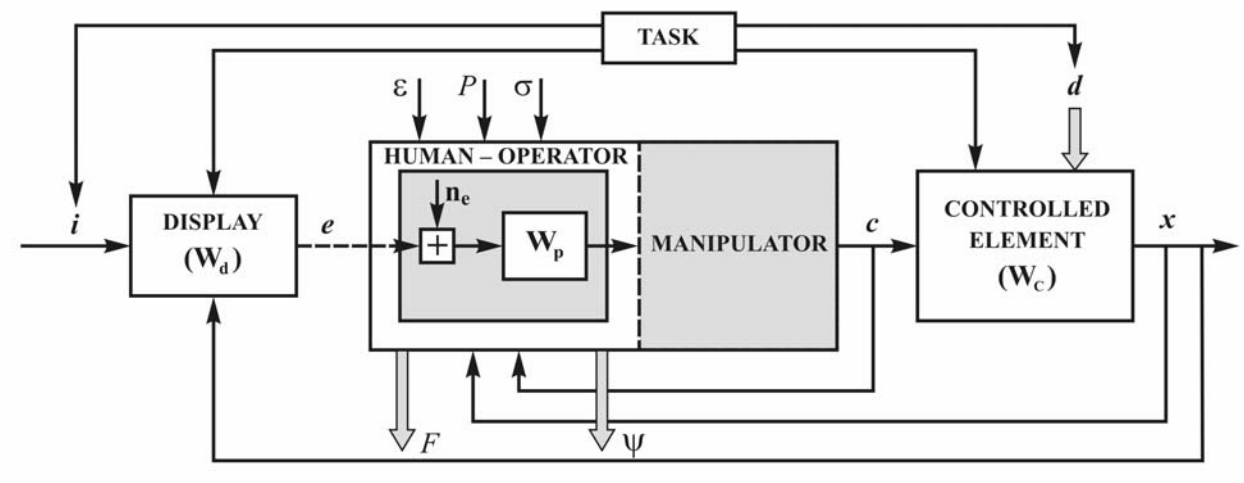

Figure 2.1: Man Machine System.

The specific peculiarities of this system are the following: any man-machine-system is a system of the systems.

Any component of it is the complex system. One of the more complicated components is the human-operator, characterized by three types of responses: control, psychological and psychophysiological characteristics. The operator model characterized by his control response on visual, vestibular and kinesthetic cues is shown on Figure 2.2. This model reflects the major processes taking place in perception, motor and central-nervous systems. The other component of this system is the controlled element consisted of the vehicle and control system (computer, filters, feedback, prefilters, actuators etc.).

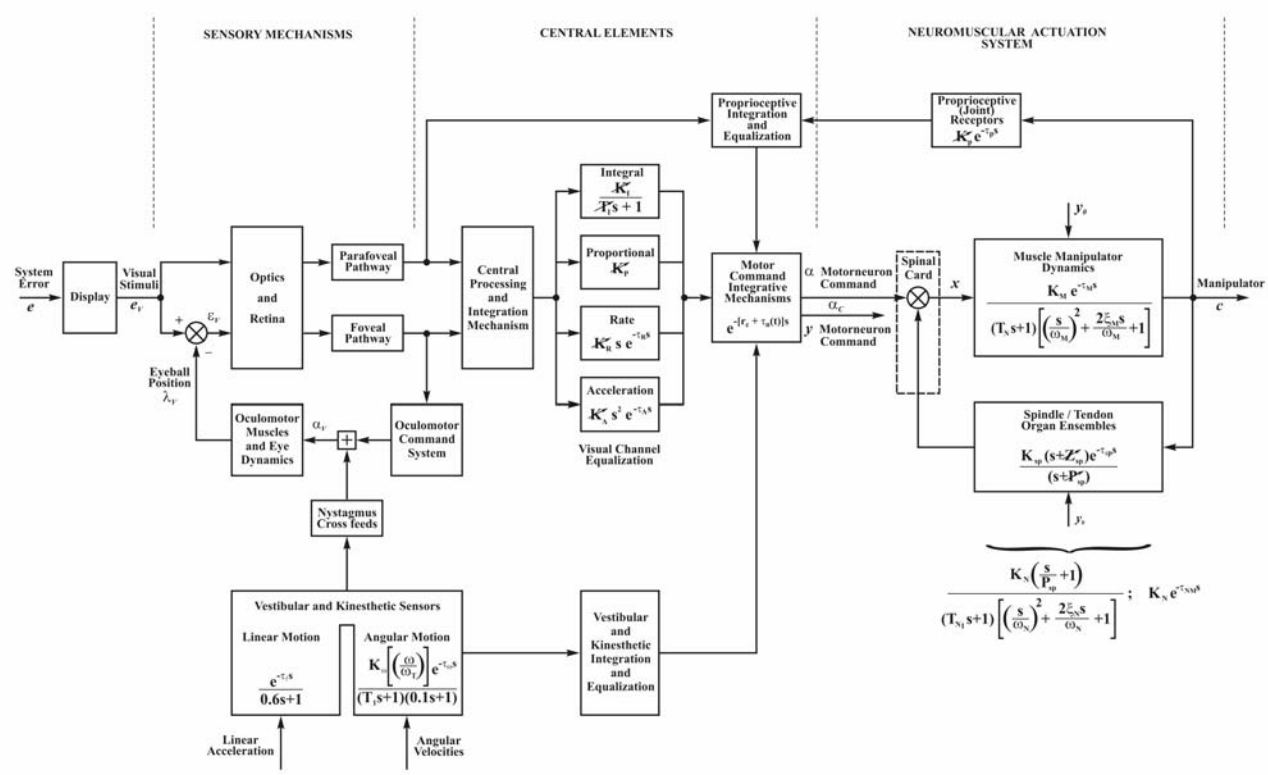

Figure 2.2: The Human Operator Subsystems.

Display is also complex system, demonstrated the different phase coordinates, director signals generated by the computer.

- The change of task (piloting task) causes the change of so-called man-machine system variables. Two of them influence on the system characteristics considerably – task variables including display, controlled element dynamics and input signal and man's center inner variables. The motivation or levels of training goals of the mission are related to the last.
- **Adaptation of human-operator behavior to man-machine variables.** If the parameters of the variables will be changed the human-operator demonstrates the change of all his pilot response characteristics too.

There are considered three types of pilot adaptation:

- **Parametrical Adaptation.** A change of any man-machine system variable parameter causes the change of human-operator control response characteristics (his describing function, special density of remnant).
- **Structural Adaptation.** For the different task or task variables (for examples vehicle dynamics) human-operator can closes different loops or/and choices the best type of behavior (compensatory, pursuit etc.).
- **Goal Adaptation.** A change of task accompanies by change of the goals (requirements to the accuracy, for example).

The adaptation is the more remarkable feature and it was investigated attentively with goal to decide the task of integration of all component of human-operator-vehicle system allowed to get the highest efficiency of the mission and its safety.

The first investigations on measurement of human-operator control response characteristics were fulfilled in World War II, [Tustin 1944 and 1947].

It became possible to do in that period, because of the theory of control began to develop and got the practical usage. Except it the progress in computers allowed to extend considerably the researches on man-machine system, to define the main principles of human operator behavior, to expose his main feature – adaptation to task variables associated with operator's attempt to keep approximately the same man-machine close-loop system characteristics. All these fundamental knowledge received by D. McRuer and his colleagues from System technology Inc. led to creation of mathematical model of control response characteristics. All these models were linear and based on classical theory of control. The definition of models parameters was fulfilled with use of so-called «adjustment rules» [McRuer et al, 1965]. These classical models differed by level of complexity describe the main regularities in pilot describing function in crossover frequency range where they have good agreement with experimental results. Therefore they call these models as "crossover models".

The pioneer stage on human-operator behavior investigations was finalized to the middle of sixties in the last century, when these models were created. The results of those researches were generalized initially in [McRuer et al 1965 and 1967] and then later in [McRuer 1973] too. To that period the developed models and exposed regularities were used widely to the different applied manual control tasks. One of them was the definition of controlled element dynamics provided the simplest type of human behavior. It was determine that in compensatory tasks human operator demonstrated the "proportional (simplest) type", ($W_p = K_p e^{-s\tau}$) in crossover frequency range when he control the rate type of the vehicle dynamics ($W_c = K/s$). Such standard controlled element dynamics was used in aviation widely: in flight control system design for choice of laws allowed to approach the vehicle dynamics to such standard in crossover frequency range [Ashkenas, Hoh, McRuer et al 1988 and Efremov]. The same ideology was used for display indicator law development [McRuer et al 1968, Weir et al and Klein et al]. The idea of the best integration of pilot's action and flight control system potentialities was used in several researches in development of prefilters [Bushgens et al] and new types of manipulators with changeable stick stiffness [Efremov 1992]. The accuracy in precise tracking tasks and stability of closed loop system depends on integration of aircraft flying qualities with the pilot activities. Such peculiarity is the reason of researches on development of criteria for prediction of flying qualities and pilot-induced oscillation tendency. At least several of them were proposed in the last several decades (see Neal and Smith, Hess and Efremov 1996).

At the end of sixties the new approach to human-operator mathematical modeling based on modern control theory was developed [Baron]. It was modified several times [Levison, Thompson and Davidson] and used widely for different manual control tasks: prediction of flying qualities [Bacon], display design [Kleinman], flight control system [Schmidt, Garg]. However the problems in definition of cost function weighting coefficients and disagreement of model and experimental data in low frequency range limited the usage of this approach for prediction of results in applied investigations. In [Efremov et al 1988] it was offered the modification of approach allowed to improve the agreement between mathematical modeling and experimental data and accuracy in prediction of flying qualities for superaugmented aircraft.

The modification of classic approach to description of pilot behavior is the structural model developed [Hess 1978] at the end of seventies last century. This model takes into account pilot ability to use kinesthetic cues for generation pilot control response. It has high potentiality in improvement of agreement with experimental data [Hess 1979 and 1984]. The modified version of this model differed by the procedure of determination of model parameters and some changes in structure were offered. This modified model was used for development of criteria for prediction of flying qualities in pitch control tracking task.

There were used different criteria for definition of the best way in integration of pilot with aircraft. One of them is the minimum of pilot opinion rating (POR), proposed by Anderson and Dillow. They developed the technique for parameter optimization based on classic model of pilot describing function. This procedure was modified later by use optimal control model of pilot behavior.

The main experience in integration of human-operator and machine was obtained in aviation because of many piloting tasks are characterized by pilot-aircraft closed loop system. The general ideology of such integration was optimization of all technical elements of man machine system: controlled element dynamics, display manipulator, provided necessary accuracy, and flight safety with minimum human operator workload. The success of such ideology in aviation defines the interest and its usage for integration of other types of human operator (driver, helmsman) with the other vehicles.

These types of human-operator-vehicle systems have some peculiarities. The driver-vehicle systems are characterized by more pursuit (and preview) type in majority driven tasks then in comparison with the compensatory type of system, which is more typical to pilot aircraft system. It takes place for turning, ramp entry and exit, precise course control, overtaking and passing. In some of driving tasks or maneuvers (lane change, evasive steering) the precognitive control presents as one of the driver control modes. In general driver-vehicle system is shown on Figure 2.3.

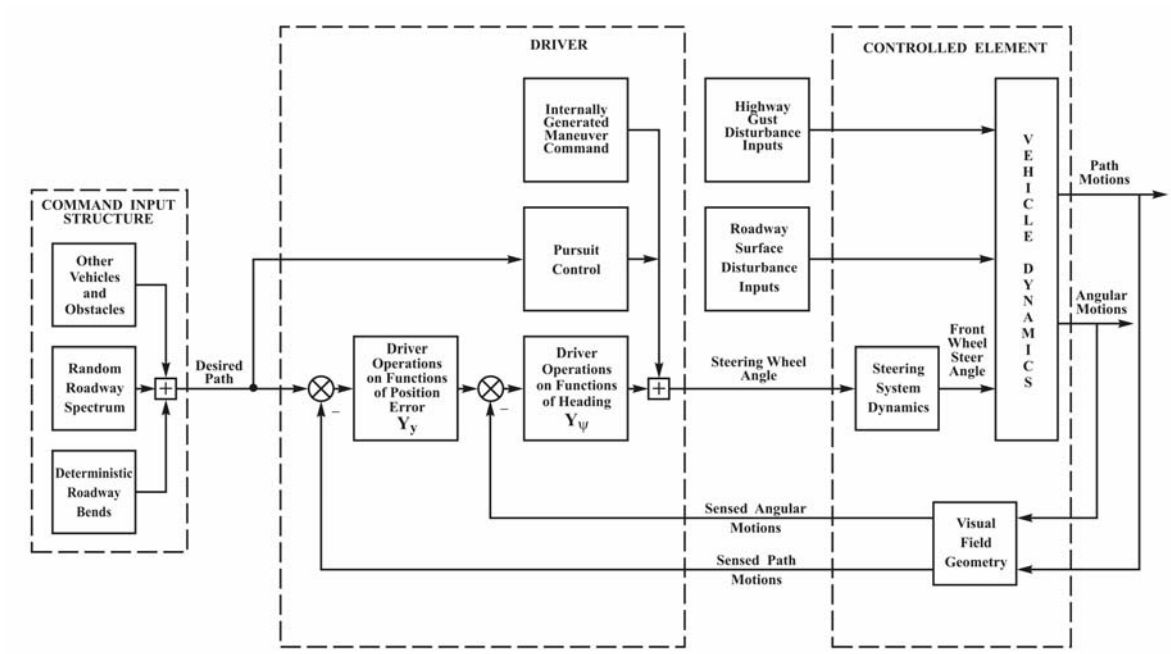

Figure 2.3: Driver Vehicle System.

Driver as an operative element in the system adapts and manipulates his dynamic characteristics to satisfy the key guidance and control requirements for the driver/vehicle system. Stated verbally, the guidance and control requirements for lateral position (path control) are:

- Establish and maintain the automobile on a specified spatial pathway;
- Reduce path error to zero in a stable, well damped and rapidly responding manner;
- Establish an equilibrant driving conditions; and
- Maintain the establish path in the presence of disturbance such as gusts crosswinds, roadway fluctuations, etc.

The driver models and technique for experimental investigations were used or modified from investigations developed before, from pilot-aircraft investigation [McRuer and Klein 1974, McRuer et al 1973, and McRuer and Klein 1976]. As the results were defined in terms of the steering characteristics, parameters of visibility and road [Weir 1970, and Allen] allowed integration of the system driver-vehicle-road by the best way.

Because of very slow processes taking place in helmsman-ship system and limited number of manual control task this system was investigated in several researches [Veldhuyzen and Stassen, and Veldhuyzen].

The model takes into account pilot ability to predict ship response and consists of two blocks-internal models of ship dynamics and decision making element (Figure 2.4).

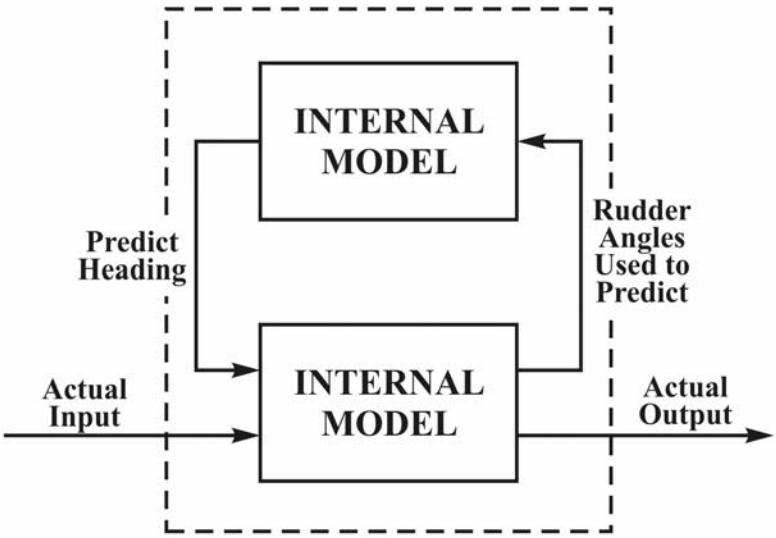

Figure 2.4: The Internal Helmsman Model.

In spite of wide use of considered above pilot behavior mathematical models all of them demonstrate different level of disagreement with experimental results. It is noticeable in low frequency range and in crossover frequency range too. The last peculiarity takes place for cases when controlled element dynamics has a considerable time delay or zero slop of amplitude ratio $|W_c(j\omega)|$ in the crossover frequency range. Therefore there is a necessity to find the new technologies for the mathematical modeling. One of them might be the artificial neural networks including feedforward and recurrent ones. In spite of there are many papers published in this area no one was dedicated to application of neural network technique to the pilot modeling. Nevertheless our analysis and knowledge of results received in the considered area are some experience in approximation of experimental results of pilot-aircraft system investigations demonstrates high ability of this technique. The more perspective kind of it is the semi soft computing technique discussed in Chapter 3.

2.1.1 Transfer of Control to a Human Operator

In this Technical Report we are addressing varying levels of autonomy, which includes consideration of a human operator assuming control of a vehicle. This can obviously be a part of the planned mission, but we should also address unplanned events. The purpose of this discussion is to review an accident related to this topic in which wind shear was cited as a primary cause, although other factors were also important. The winds calculated from the recorded airplane flight parameters, [see Anon 1975], show that both the

tailwind and crosswind were greater than 20 kts above 500 ft altitude, with relatively little variation. Between 500 ft and 200 ft there was an extreme wind shear, such that the cross-wind reduced to less than 5 kts and the tailwind decreased to zero, becoming a small headwind from 250 ft to the ground. Thus, the winds by themselves presented a complex piloting task. It can also be seen that the surface winds given by the control tower (equivalent to a 4 kt headwind and a 2 kt crosswind) give absolutely no indication of potential problems. This is what the operator (the pilot in this case) would know ahead of time.

The final approach was made with autopilot coupled and auto throttle engaged, i.e. can be considered as autonomous operation for the purposes of this discussion. Because of conditions peculiar to the airfield the autopilot was disengaged at 184 ft altitude with the runway partially in sight, and a manual landing was attempted. Above 500 ft the automatic flight control system (AFCS) established off-nominal trim conditions of a higher rate of descent, reduced thrust and reduced pitch attitude in order to maintain the glideslope. As the airplane descended through approximately 500 ft the tailwind and crosswind began to decrease. With a decrease in tailwind, the momentum of the aircraft caused an initial increase in airspeed and consequent rise above the initial glideslope. This is discussed in the reference, but not pointed out, is that without any control input the aircraft would decelerate to approximately the original airspeed and descend below the original glideslope. The AFCS responded to the initial perturbation, however, by reducing thrust and decreasing pitch attitude, i.e., the opposite of the long-term corrections required. As the aircraft started to descend below the nominal glideslope, the AFCS would normally start to reverse the previous inputs and reacquire the glideslope. A further decrease in tailwind, however, would tend to produce another transient increase in airspeed and rise, causing further reduction in thrust and pitch attitude. Since the winds for the accident showed a continuous wind shear down to 200 ft altitude, it is probable that the AFCS was continually correcting the “initial transient” by reducing thrust and pitch attitude until the point at which it was disengaged. Also starting at about 600 ft altitude the left cross wind began to decrease, causing the aircraft to move left of the localizer. Although the autopilot input appropriate corrective control commands, the aircraft was still left of the localizer (but close to the glideslope) when the autopilot was disconnected. Thus, we consider that the autonomous system was in a continual dynamic control mode.

Now, we consider the effect of handing off the control to a human operator, in this case a pilot actually in the vehicle. It has been said that “we need autonomous systems to operate with human efficiency”. It is also true, however, that human operators can be disoriented. With the available visual cues the pilot judged his primary task to be aligning with the runway. At this point, unfortunately, we have already pointed out that the system was in a dynamic mode and he would have been given the ground conditions as only light winds. The following list of events Table 2.1, from the discussion in the reference, illustrates the conditions at various points including autopilot disconnect which occurred twelve seconds before ‘touchdown’. Engine rpm and pitch attitude are shown to allow comparison with nominal no wind conditions.

Table 2.1: Thrust and Pitch Attitude Before the Accident

TIME	EVENT	ENGINE RPM %	ATTITUDE (degs)
t-15	Middle marker	56	0.9
t-12	A/P Disconnect	54/48.5	0
t-9			begins to increase
t-3		begins to increase	
t		77	5.4
NOMINAL NO WIND CONDITIONS		76.2	4.2

Because of the low-level headwind the thrust and pitch attitude required would be higher than the no-wind values. The preceding table shows that the pilot did make those necessary corrections, but pitch attitude control came three seconds after A/P disconnect and thrust increase started six seconds after disconnect, i.e. too late to prevent a short landing.

It may be of interest to consider the vehicle response to the type of airspeed perturbations under consideration. A reduction in tailwind (equivalent to an increase in headwind) is felt as an instantaneous increase in airspeed. The primary effects are increases in both lift and drag. For a conventional aircraft it is common to assume separation of the longitudinal dynamic response into a well-damped short period made (variations of pitch attitude and angle of attack at constant airspeed) and a lightly-damped phugoid mode (variations in airspeed and pitch attitude at constant angle of attack). The response to an airspeed perturbation is dominated by the phugoid characteristics since it is primarily this mode that is excited, and any small angle of attack perturbations are quickly damped out.

Now, if the pitch attitude perturbations are suppressed the classical modes become an approximate "angle of attack" mode and an approximate "airspeed" mode. In this example the phugoid mode becomes aperiodic, see Moorhouse 1977. Even with a reduced time constant the aperiodic mode does not give the pilot any appearance of airspeed stability, whereas the oscillatory mode shows a significant reduction in the airspeed perturbation within a few seconds. It may be surmised that the aperiodic mode would induce over control, i.e., larger power changes than necessary to correct the airspeed transient. Thus, in a dynamic control mode the response would appear significantly different from what the operator may be expecting.

The above is a simple example of an unplanned event. It would have been possible, however, to provide a warning to the pilot of the overall nature of the wind shear to be encountered on a landing. This would be done by means of a computational procedure which would give the nominal trim conditions for the glideslope being flown with the calculated values in the reported surface wind conditions.

This discussion concerned one particular accident in which a primary factor was the occurrence of large wind shears. It has been shown that airspeed response to wind shear is adversely affected by tight control of pitch attitude to maintain glideslope. It is only an example of how to address unplanned events from degrading the hand over of an autonomous system to a human operator, if that operator is assuming complete control of the flight path. Technically, it seems straightforward to sense if the autonomous system is in a dynamic control mode. This would be deviations from the planned flight settings due to winds, threat avoidance, etc. It would be possible to compare this activity with the conditions assumed by the operator, and provide the advance warning/information to assist the operator by avoiding total surprise.

2.2 CASE STUDIES

2.2.1 Land

2.2.1.1 Background

The complexity associated with land environments has imposed unique demands on unmanned ground vehicles (UGV). Unlike its air (UAV) and sea (AUV) cousins, a UGV cannot assume its environment is passive and largely obstacle free. A UGV must actively sense its environment, create a representation of its world, and analyze its internal representation for obstacles before it can safely traverse. Formally, this is known as the sense, model, plan and act paradigm (SMPA) [Brooks 1991]. Of these four steps, the modelling and planning steps are considered the most difficult, especially when faced with unstructured environments. Given that unstructured environments are intrinsically unpredictable, early deliberative SMPA focused on structured environments that simplified the modelling and planning tasks [Nilsson]. This early research revealed that the monolithic, deliberative SMPA approach was brittle, cumbersome and slow. Subsequently, robotics diverged towards reactive systems, which used the world

itself as the model. Using the world as the model greatly reduced the reliance on modelling and planning, and produced high performance systems that were capable of robust performance in high complexity, unstructured environments [Brooks 1989a, Brooks 1989b, Connell and Arkin]. Although reactive robots exhibited interesting, insect like characteristics, their lack of predictability yielded few useful applications. Most current UGVs, using a network of complementary control threads, now exploit a hybrid implementation that is composed of both deliberative and reactive control strategies. These hybrid architectures are pragmatic systems involving multiple computing elements of varying scales, protocols and capabilities that are networked into a functional, engineered system. Numerous hybrid architectures have been proposed and developed and the following is a partial list of the best known architectures:

1) The Task Control Architecture (TCA), shown in Figure 2.5, was one of the first architectures that united both the deliberative and reactive approaches [Simmons].
2) The Distributed Architecture for Mobile Navigation (DAMN) uses an arbiter as a means of integrating deliberative planning with reactive control [Rosenblatt]. The DAMN architecture is shown in Figure 2.6.
3) The Three-tiered Architecture developed by Bonasso [Bonasso et al].

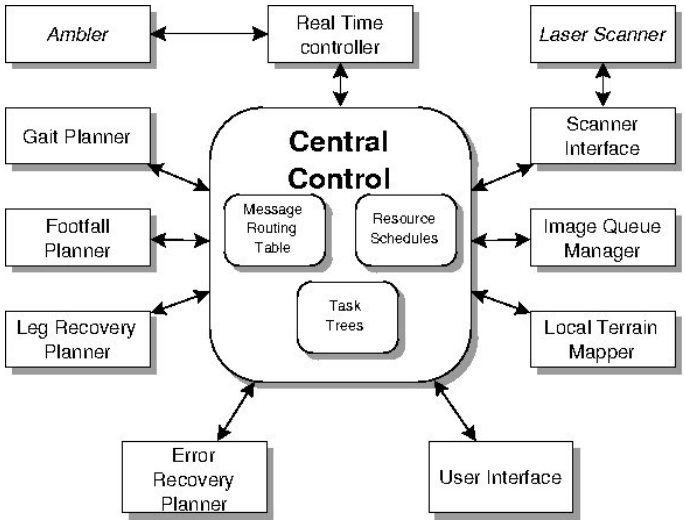

Figure 2.5: Carnegie Mellon's Task Control Architecture for the Ambler Hexapod.

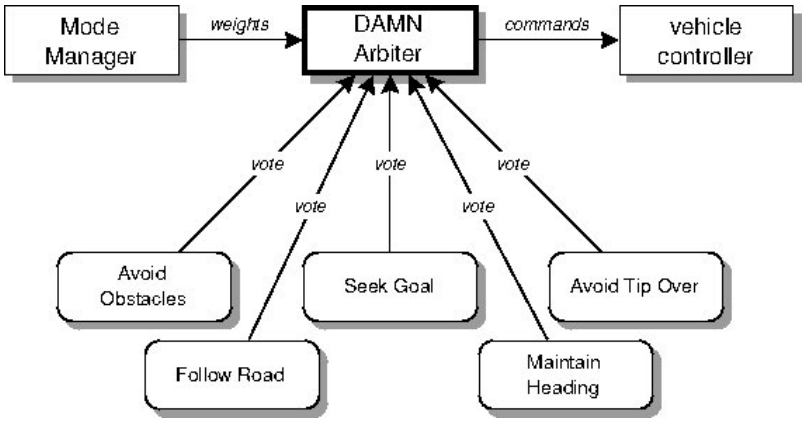

Figure 2.6: Carnegie Mellon's Distributed Architecture for Mobile Navigation for the NAVLAB.

All hybrid architectures attempt to interleave the hierarchical, deliberative paradigm and its sluggish response times, with the quick reactive behaviour based paradigm. This approach has yielded successful UGV implementations [Thrun et al 1998 and Brock et al], and is the dominant approach for the current generation of UGVs.

2.2.1.2 UGV Case Studies

2.2.1.2.1 Mars Rovers

Given Mars' orbital location and its distance from the Earth, it is impossible to drive Mars rovers in the traditional tele-operated manner. All Mars rovers exhibit a degree of autonomy, though their level of autonomy may be best described as semi-autonomous. The Pathfinder rover had a very limited degree of autonomy. Earth based engineers used the Rover Control Workstation [Cooper] to craft a detailed set of commands that described the sequence of operations to be performed by the rover. The Pathfinder rover was restricted to executing the command sequences as they were received. Most faults or anomalous situations required the rover to halt all activity and wait for the ground operations team to diagnose the problem and uplink a recovery plan [Washington et al].

The second generation of Mars exploration rovers (MER), called Spirit and Opportunity, are considerable more advanced than the first generation Pathfinder rover. These rovers include autonomous navigation (AutoNav) and visual odometry (VisOdom) that give the MERs considerable autonomous capabilities. Visual odometry significantly improves the MER's position estimation, as it is much more accurate than a position estimate that is basely solely upon wheel odometry. Under AutoNav, the MER, using its stereo vision cameras, acquires 3-D range data, uses the range data to construct a terrain map, analyses the terrain map for both positive and negative obstacles, and plans a route to avoid the detected obstacles [Biesiadecki]. Unfortunately, both MERs are computationally bound, and using its full autonomous capabilities seriously degrades the speed at which it can drive. Using directed drive commands a MER can cover distances of up to 124 meter/hr, AutoNav reduces the drive distance to 10 to 36 meter/hr, while AutoNav used in conjunction with VisOdom drops the traverse rate to 6 meter/hr. A MER, undergoing testing at JPL's Spacecraft Assembly Facility, is shown in Figure 2.7.

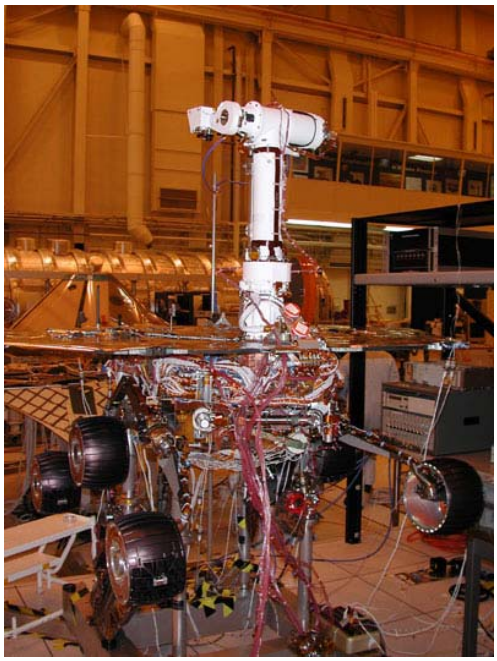

Figure 2.7: The Mars Exploration Rover, Courtesy NASA/JPL-Caltech.

2.2.1.2.2 DARPA Grand Challenge

In stark contrast to the very conservative autonomy implementation used on NASA's Mars rovers, the DARPA Grand Challenge demanded that autonomous ground vehicles (UGV) implement aggressive strategies. The DARPA Grand Challenge, initiated in July, 2002, challenged researchers to conceive and build autonomous vehicles that could traverse 140 miles (227 km) of outdoor terrain within a 10 hr time limit. The outdoor terrain featured difficult desert roads, global positioning drop-outs, sharp turns, narrow openings, bridges, railroad overpasses, long tunnels, and obstacles. DARPA offered a $1,000,000 US prize to the team that completed the course in the shortest period of time. The teams travelled to Barstow, CA to compete in DARPA's first grand challenge. Of the 106 competitors, only 15 vehicles completed or partially completed the qualification round and competed in the actual race. The fact that none of the 15 finalists finished the course attests to the challenges associated with traversing outdoor terrain. Sandstorm, from Carnegie Mellon University, was the most successful entry and it only traversed 7.4 miles before immobilizing itself on a berm.

Traversing unstructured terrain requires the implementation of the full SMPA cycle, where sensors acquire data, a world representation is created and updated, planning is performed, and commands are issued. This process must be implemented in real-time as the vehicles are travelling at speeds near 20 mph (32 km/hr). To operate at such speeds, the vehicle must respond quickly to new inputs while maintaining a global strategy that allows it to pursue long-range goals.

The second DARPA Grand Challenge, held in Oct 2005, was a 132 mile (214 km) unpaved course near Primm, NV. One hundred and ninety-five teams applied to compete for this race's $2,000,000 US prize and only 23 teams qualified. Using the lessons learned from the previous race, 5 teams devised UGVs that successfully completed the course. Of these 5 UGVs, the winner, Stanley from Stanford University, and the runner up, Sandstorm from C.M.U., illustrate the two distinctive philosophies of UGV implementations.

Researchers with a wealth of experience (Sandstorm competed in the first Grand Challenge) devised Sandstorm and, using this experience, they focused on simplifying the overall robotic system. This was accomplished via a balanced approach using mechanical and software solutions that leveraged existing technologies [Urmson et al]. On the mechanical side, Sandstorm, shown in Figure 2.8, was derived from the HMMWV platform, which has a much larger ground clearance than a typical sport utility vehicle. Consequently, the onboard navigation software is less sensitive to terrain features as the vehicle can intrinsically surmount relatively large obstacles (Team TerraMax took this approach to an extreme by using the massive Oshkosh MTVR MK23 truck platform). From the software perspective, human input was used extensively at the preplanning stage, thus also reducing the complexity of the onboard navigation system. Grand Challenge competitors were given the course route, as a set of GPS waypoints, 2 hrs before the race start. During this 2 hr run up, human expertise was leveraged to supplement the route data and to account for dangerous terrain that might be difficult for the UGV to detect in real time. Hence, during a majority of the race, Sandstorm followed a predefined set of waypoints, at a predetermined velocity. Under this regime, the SMPA cycle is reduced to behavior that executes only under extenuating circumstances, such as the detection of an obstacle or hazard. In summary, Sandstorm can be viewed as a system with guarded autonomy. While embracing significantly more autonomy than delivered by the NASA Mars rovers, Sandstorm still relied heavily upon human expertise to choose its initial route.

Figure 2.8: C.M.U.s Sandstorm Unmanned Ground Vehicle.

Stanley, the robot that won DARPA's second Grand Challenge, represents the second philosophy for UGV development. The Stanford Racing Team treated "autonomous navigation as a software problem", hence the robot's software relied predominantly on state-of-the-art artificial intelligence technologies such as machine learning and probabilistic reasoning [Thrun et al 2006]. Whereas Sandstorm relied on vehicle mobility and human preplanning, Stanley focused on software and autonomous capabilities. Following this line of reasoning, Stanley was built upon a modified Volkswagen Touareg R5 SUV, which remained in a street legal condition. Figure 2.9 shows the Stanley UGV.

Figure 2.9: Stanford's Stanley Unmanned Ground Vehicle.

Both Stanley and Sandstorm devised real–time, hybrid, SMPA implementations that sensed and modelled the world, planned within the world model, and acted upon the chosen plan. Stanley's SMPA implementation was significantly more complex than Sandstorm's, as Stanley incorporated probabilistic reasoning that allowed for more reliable world representations, and machine learning allowed Stanley to learn from experience. The Grand Challenge racecourse included diverse terrain whose appearance changed with both locale and with time of day due to lighting conditions. Stanley's ability to learn while driving allowed it to quickly adapt to these changing conditions and this ability was a key factor in Stanley's victory.

2.2.1.2.3 Unmanned Ground Vehicles at DRDC – Suffield

DRDC – Suffield started its UGV program in the late 1980's with the development of tele-operated ground vehicles. Since its inception, DRDC's tele-operation program has developed numerous tele-operated vehicles, with various capabilities that were suited to differing applications. This vehicle stable includes: a DH6 Caterpillar, a Bobcat with a backhoe, a 6 wheel drive skid steer vehicle, and a number of 4 wheel drive vehicles. Figure 2.10 shows a recent addition to DRDC's tele-operated vehicle stable.

Figure 2.10: DRDC's Tele-Operated Multi-Agent Tactical Vehicle.

Beginning in the late 1990's, DRDC shifted its focus from pure tele-operation to autonomous vehicles. The DRDC Raptor UGV, show in Figure 2.11, is capable of autonomous operation in unstructured, outdoor terrain. The Raptor UGV implements a real-time, hybrid SMPA cycle that allows it to:

- Sense terrain using nodding laser rangefinders [Broten et al 2006] and stereo vision;
- Update the internal world representation [Broten et al 2007];
- Determine the best obstacle free path [Giesbrecht] that progresses the Raptor towards its goal [Mackay]; and
- Send steering and velocity commands that drive the vehicle.

Figure 2.11: DRDC's Raptor UGV.

The Raptor UGV is a system of systems that, when operating together, allows the vehicle to operate autonomously without the need for human intervention. Figure 2.12 illustrates the individual systems that comprise the Raptor UGV.

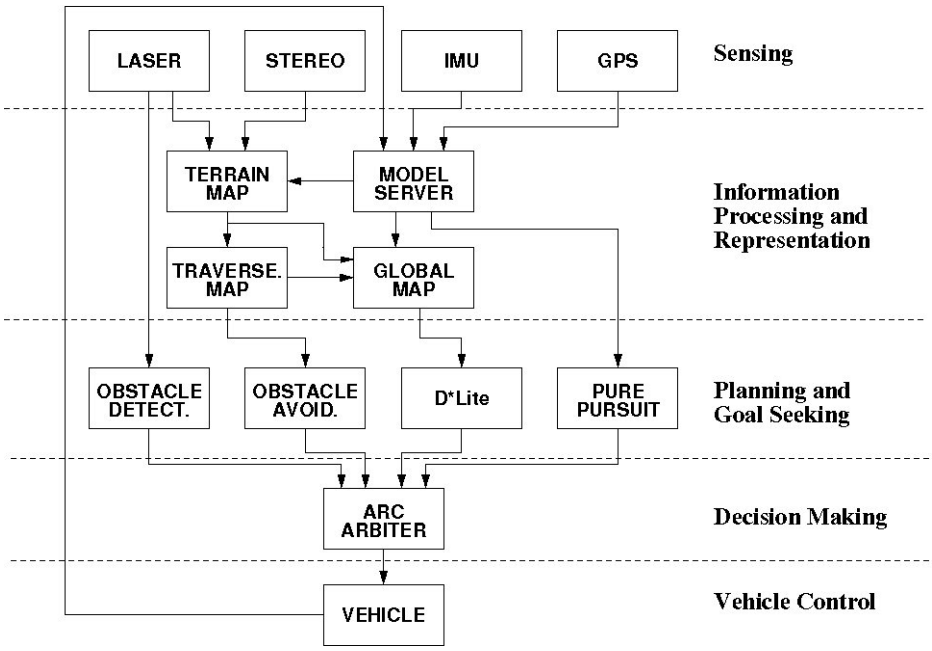

Figure 2.12: Raptor UGV Systems.

Each individual system is a separate entity that exports defined interfaces and is capable of acquiring data from other system interfaces. This modular approach, based upon components, is achieved using a software framework [Broten et al 2006]. DRDC's systems approach allows researchers to easily modify existing components and to add new components into the existing structure. The Raptor UGV's autonomous capabilities have been exercised on numerous field trials.

2.2.2 Sea (DH)

Today there are many examples of autonomous marine vehicles that employ various levels of autonomy. The most numerous of this class of vehicle is usually referred to as autonomous underwater vehicles (AUVs), or sometimes unmanned underwater vehicles (UUVs), and can vary in size from something weighing less than 50 kg to vehicles with close to 9000 kg displacements. The vehicles can be designed for shallow water depths of 10 m or less, or deep water depths of over 6000 m. Similarly, their mission endurances can vary dramatically – from as little as several hours to a week or more. Figure 2.13 shows two vehicles that demonstrate this dramatic range of size and capability. The Remus vehicle, developed by Hydroid, is an example of a more compact AUV that is used in many application areas, ranging from general scientific sampling and mapping to more focused mine countermeasures. The Theseus vehicle, built by International Submarine Engineering for Defence Research and Development Canada, is an example of a vehicle that was developed for one specific mission – to lay 220 km of fiber optic cable under the Arctic ice.

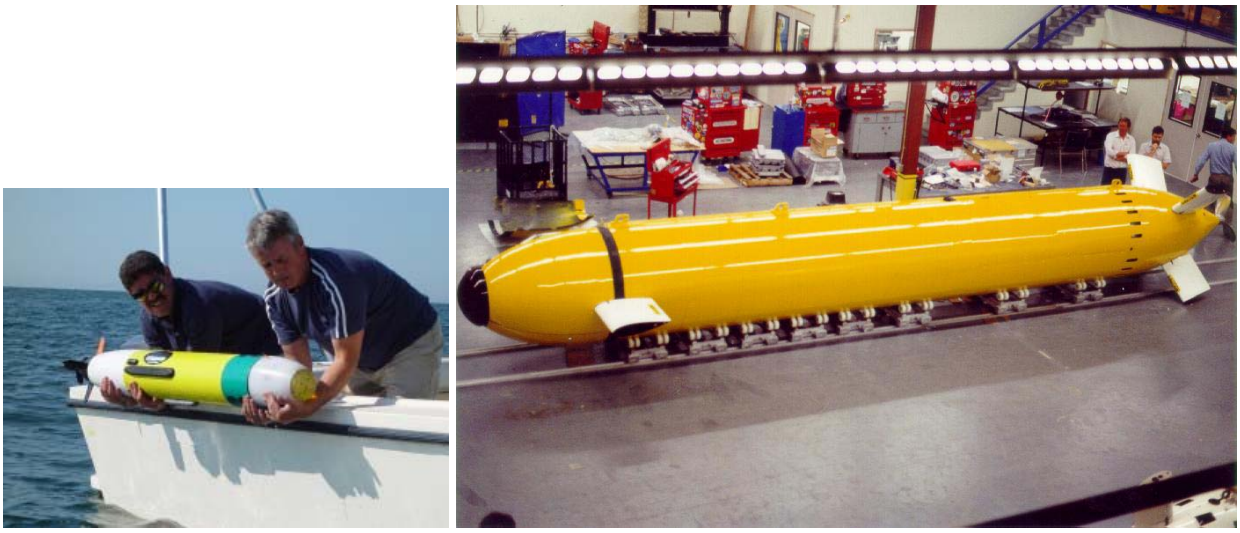

Figure 2.13: Two Examples of Autonomous Underwater Vehicles. The smaller vehicle Remus (left) is a compact, general purpose vehicle. The larger vehicle, Theseus (right) is designed for a specific mission.

In addition to AUVs, there is a second class of autonomous marine vehicles, known as unmanned surface vehicles (USVs). In general, USVs are built for very specific mission applications. Figure 2.14 shows two examples of USVs, the multi-mission Spartan vehicle (left) and the Remote Minehunting vehicle Dorado (right).

Figure 2.14: The Multi-Mission Spartan Vehicle (left) and the Remote Minehunting Vehicle Dorado (right) are Two Examples of Unmanned Surface Vehicles.

The Spartan is a modular vehicle built around a 7 m rigid inflatable vehicle (RIB). The payloads vary from a variety of sensor packages for minehunting and submarine detection to a variety of weapons payloads. The Dorado is a semi-submersible based vehicle that was initially designed to provide a stable platform for hydrographic surveys in high sea states. More recently, the third generation of the Dorado vehicle has since been developed specifically for remote minehunting missions.

Independent of size and mission, all of these unmanned systems have one very important thing in common – through varying degrees of autonomy, they have removed the human operator from a hostile operating environment, enabling missions that would be otherwise impossible to complete. In order to explore the degree of autonomy employed in each of the systems, and the impact this has on overall system complexity and mission reliability, the Dorado remote minehunting system and the Theseus AUV will be examined in more detail.

2.2.2.1 Theseus AUV

From 1992 to 1996, International Submarine Engineering Research and the Esquimalt Defence Research Detachment of Defence Research Establishment Atlantic worked together to develop a large autonomous underwater vehicle for laying fibre-optic cables in ice-covered waters. The vehicle, named Theseus, was designed to lay up to 220 km of fibre-optic cable. The water depth along the cable route varies from 50 m at the launch site to between 500 and 700 m at the array site.

Both the environment and the complexity of the mission imposed severe constraints on the vehicle design. In the operating area the ocean is completely ice covered, mostly by multi-year ice, 3.5 to 10 m thick, with ice keels that can extend to depths of 30 m within 10 km from the launch site, and 50 m further out; water currents vary from 0 cm/sec up to 50 cm/sec near the launch site, and up to approximately 10 cm/sec at the array site; air temperatures vary from –40 to –20° C during the only possible deployment period (late March to early May); and water temperatures vary from –2° C just under the ice to +4° C near the bottom at a depth of 600 m.

To lay the cable, return to the launch site and allow a safety margin required a 450 km endurance and a 220 km cable capacity. The system required a navigational accuracy within 1% of distance travelled, and needed a terminal homing system for the final run-in to the array site. To minimize the amount of cable in the water column, the AUV was required to follow the bottom at an altitude of 20 to 50 m. To facilitate air transport to the launch site, a modular construction was required, with each section weighing under 1400 kg.

In addition, it was determined that an obstacle-avoidance sonar (OAS) system would be required to ensure that the vehicle would not crash into uncharted bottom features or into ice keels. Acoustic telemetry was also considered essential for occasional enroute communication with the vehicle. The vehicle needed a precise terminal guidance system to facilitate cable recovery. A provision was included to allow the vehicle to update its position at acoustic beacons located along the route and also at the cable delivery site. Details on the resulting vehicle are provided in the next section.

A cross-section of the Theseus AUV is shown in Figure 2.15. The principal characteristics of the vehicle are listed in Table 2.2.

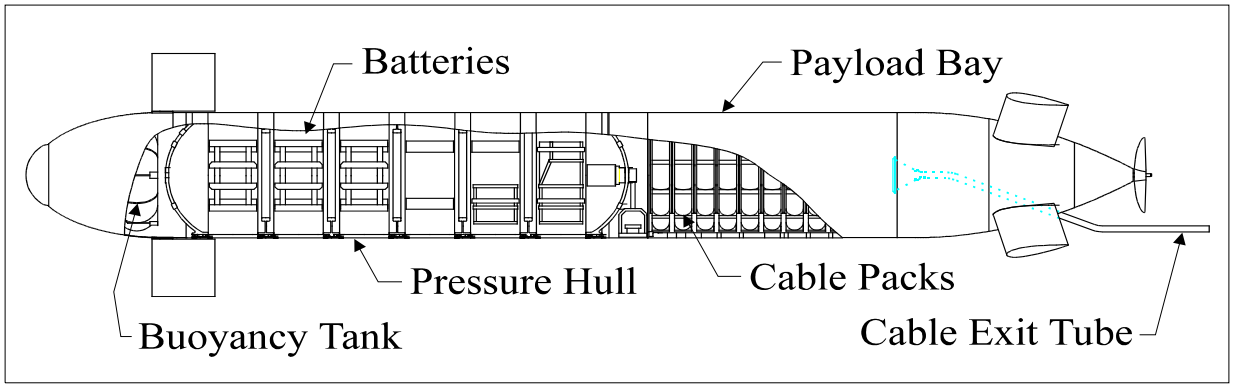

Figure 2.15: Theseus Schematic (Foreplanes, Exit Tube in Plan View, Remainder in Elevation View).

Table 2.2: Theseus Vehicle Characteristics

Length	10.7 m (35 feet)
Diameter	127 cm (50 inches)
Displacement	8600 kg (19,000 lbs)
Speed	2 m/s (4 knots)
Range	700 km (380 nm)
Maximum Operating Depth	425 m verified, 1000-m (3280-foot) design depth
Cable Capacity	220 km
Navigational Accuracy	Achieved ~0.5% of distance travelled
Propulsion	6 hp brushless dc motor and gearbox / single 61 cm diameter propeller
Power	360kWh Silver Zinc battery pack consisting of 280 individual cells manufactured by Yardney. 450 km mission plus an additional 24 hours of hotel load with a safety factor of two.
Variable Ballast	±95 kg (250 lbs) in each of 2 toroidal tanks, 1 fore and 1 aft
Controller	Proprietary real-time kernel running on MC68030 microprocessor
Navigation systems: Transit	Honeywell MAPS Inertial navigation unit EDO 3050 Doppler sonar (bottom tracking)
Terminal Homing	Datasonics ACU-206 acoustic homing system. Ranges up to 10 km in 500m-deep water.
Acoustic Telemetry	Datasonics Model ATM851 using Multiple Frequency Shift Keying (MFSK) plus error encoding operating in the 15 to 20 kHz band.
Fibre Optic Telemetry	Used on outbound leg of mission for vehicle status. Allows operator to assume control
Emergency Beacons	ORE 6702 acoustic transponder located in the tail section. Interrogated with ORE LXT ultrashort-base-line acoustic tracking system operating at 11kHz.
Obstacle Avoidance	Sonatech STA-013-1 forward-looking sonar. 5 by 4 beams.
Pressure Hull	5 cm-thick Aluminum (7075), 4.5 m by 127 cm diameter in 5 sections plus end domes. Design depth 1000 m.
Payload Bay	Free-flooding fiberglass shell with syntactic foam lining, top half removable. Inner diam 114 cm, length 228 cm. Payload up to 1960 kg dry, 320 kg in water.
Current Payload	11 packs of 20 km cable, each weighing 60 kg in water. 11 toroidal compensation tanks fill as cable paid out. Tank inner diam 76 cm (30 in).
Transportability	Modular construction in sections under 1400 kg each.

In order to increase the fault tolerance, Theseus manages fault responses using a pre-defined fault table. This table allows the user to divide a mission into any number of phases, where a phase consists of one or more manoeuvres between waypoints. Each phase of a mission script has its own set of responses to each of the vehicle faults: a response is either stop up under the ice, stop down to the sea bed, change to another

mission step, or ignore the fault. Therefore, a change of phase occurs when the desired response to some fault changes, such as when approaching a manned camp. At this point a new set of entries in the fault table takes effect. It was decided that 18 phases adequately provided for the changing circumstances during the Arctic mission.

Designing a navigation system to allow an AUV to navigate autonomously under-ice for more than 400 km was a challenge. The presence of a permanent ice cover requires that all sensors used to determine position had to be located below the ice cover but not necessarily on board the vehicle. The chosen solution for navigation was to use an onboard, medium-accuracy positioning system for outbound/inbound transits, and an external, but subsurface, terminal-guidance acoustic positioning system for cable delivery and vehicle recovery.

Theseus monitors its position by dead reckoning. It uses a Honeywell medium-accuracy inertial navigation unit (INU) and a Doppler sonar. The INU provides heading and attitude data, while the Doppler sonar measures forward and lateral ground speeds, as well as altitude above the seafloor. This combination provides positions with an error of approximately 0.5% of the distance travelled, well within the 1% design goal.

The cable is stored on a series of spools which are stacked longitudinally along the vehicle axis. Adjacent spools are spliced together prior to launch. The cable and splices wind off the spools from the inside-out, and exit through a tube in the stern. The tension on the cable (to keep it from free-spooling) is maintained through the use of a special glue applied to the cable during the spooling process. To keep the system simple and reliable, no active tensioning or dispensing devices are used.

As the cable leaves the vehicle, weight is lost. To prevent this from affecting vehicle trim, the loss in cable weight is counteracted by an automatic buoyancy compensation system. Surrounding each cable spool is a toroidal hard ballast tank which is filled with water as the cable is dispensed from its companion spool. This keeps the net buoyancy of each spool/tank assembly near neutral.

2.2.3 Air and Space

2.2.3.1 F-22A Flying Qualities Development

The development and integration of the flight control system on the F-22A is cited as an example of how the Systems Engineering process can be applied properly. The specifics are discussed in RTO Report 29 and in Harris. One of the hallmarks of this “Design for Flying Qualities” Process is that one of the flight dynamics simulations of the air vehicle is identified as the “truth model” of the air vehicle. This truth model is “pedigreed”; that is, each component and its integration into the whole is identified, an accurate simulation model of that component and its interfaces is developed, and that component model is shown to be traceable to “reality” (system design and test data and the physics associated with the component). In addition, positive and negative margins and tolerances in how the system will perform are identified and tracked, as well as limitations of the component model and the effect of those limitations on the total air vehicle model. Once identified, the entire flight dynamics simulation, including all of its components, is placed under strict configuration control, and a disciplined process for updating component models is implemented, allowing for the systematic updating of the simulation as new specifications, component test data, or air vehicle flight test data become available. As implemented, the F-22A “Design for Flying Qualities” Process was, in fact, a continual iterative system engineering process applied to the development of the flying qualities of the aircraft, and it explicitly addresses steps 3 – 6 of the Systems Engineering process (see Chapter 3).

As implemented, the simulation should be as accurate as possible, rather than being conservative at each interface and in each subsystem model. The result of such conservatism is the simulation equivalent of a

"negative tolerance stackup". One of the authors of this report was associated with a flight development program where the actual aircraft displayed performance much better than the flight dynamics simulation indicated. While pleasantly surprising, the simulation model had in fact failed to accurately predict the behaviour of the flight vehicle. In examining the simulation to determine why this had happened it was found that such conservative tolerance stackup had occurred.

This is not to say that component performance bounds should not be tracked. When combined, the negative and positive tolerance stickups of predicted performance will form the bounds of sensitivity analyses. When these sensitivity analyses are performed, not only should the question of "what happens if everything is as bad as it could be and still within specification bounds" be examined, but also the question of "what happens if everything is as good as it can be" should also be examined.

One of the report authors was acting as consultant after one 'major visible system problem'. The working level unanimously said there was a problem with inter-group communication and no integration. The first-level manager said that was not true. This is a red flag, when there is consensus on a working problem {not one disgruntled employee} but the manager denies it, then INVESTIGATE. In contrast, the cooperation and smooth team functioning exhibited by the F-22A Flying Qualities Working Group (FQWG) was cited by an independent evaluator as one of the major contributors to the success of the F-22A in achieving excellent flying qualities. Indeed, the FQWG achieved such a standard of excellence and cooperation that on more than one occasion simply saying, "the FQWG recommends that…" carried sufficient authority and credibility to obtain management cooperation or approval.

The Design for Flying Qualities process has subsequently been adopted as a Best Practice by development teams at the USAF's Aeronautical systems Center and at the USN's Naval Air Systems Command.

2.2.3.2 Apollo and the Space Shuttle

The United States' Apollo spacecraft system (consisting of the Saturn launch vehicles, the Command, Service, and Lunar Modules, the Skylab space station (itself consisting of several modules), and the Apollo-Soyuz Docking Module) was designed to a system Probability of Loss of Aircraft (PLOA) of 1/1000 per flight, but was implemented with a high level of redundancy (including the "dissimilar redundancy" of using the Lunar Module as a "lifeboat" for a disabled Command/Service Module, evaluated in flight on Apollo 9 and used on Apollo 13). In fact, only for three mission phases (the Lunar Module's ascent from the moon into initial parking orbit, the trans-earth injection to return to the earth, and the Command Module's re-entry) did Apollo flight crews not have a hardware or procedural backup of some form available; in those cases the components required to function correctly for a successful mission were designed and tested to very high standards, and when possible the number of individual components without similar backups (specifically the combustion chamber/nozzle assemblies for the Lunar Module ascent stage and the Service Module) were minimized.

Flight Director Gene Kranz [Kranz] also credits a philosophical approach of treating any active combination of modules and launch vehicles as a single integrated entity as a major factor contributing to the success of Apollo. In this sense, Apollo's managers and flight controllers presaged a "system of systems" approach. Another factor in Apollo's success was an extensive test program, beginning with components and progressing through subassemblies to full system, full-scale tests to ensure the performance of the hardware was well understood and within (or better than) specifications. Finally, every Apollo flight (particularly after the Apollo 1 on-pad cabin fire) was philosophically approached as a high-risk test flight. The result was no losses of vehicles or crews in 6761.49 system manned flight hours and only one loss of mission (Apollo 13) with successful recovery of the flight crew. Given the design PLOA of 1/1000 per flight and an average flight duration of 450.76 hours for the 15 manned Apollo flights (including 3 long-duration Skylab flights), the equivalent design PLOA is actually 2.22e-6 per hour.

NASA's ambition for the next spaceflight program after Apollo – the Space Transportation System, or Space Shuttle – was a vehicle which could be operated much more like a production public-use aircraft. Part of this was a desire to change the whole philosophical approach to manned space flight, while part (in retrospect, a significant part) was driven by greatly-reduced appropriations in the 1970s. The result was an attempt to apply design, test, and operating procedures and paradigms appropriate to a mature, production system operating in a well-defined and understood environment to what is arguably the most complex flight vehicle ever built. Even prior to its first flight in 1981, attempts were made to reduce costs by reducing component and subassembly testing. During development, multiple catastrophic failures of components of the Space Shuttle Main Engines (SSMEs) absorbed the projected cost and schedule savings and then some; other components proved equally troublesome.

NASA's travails in operating the Space Shuttle have been well documented (See, for example, the Columbia Accident Investigation Board Report, [Anon 2003b], and Mike Mullane's Riding Rockets, [Mullane]. From a design standpoint, the Shuttle system was meant to have reliability sufficiently high to allow this, which would require the PLOA to be of the same order of magnitude as that seen in airline operations, which ranged from 9.1e-7 to 5.6e-8 per flight hour during roughly the same time period (specifically 1983 – 2002 for United States commercial (14CFR121) operations). Instead, the Shuttle has suffered two well-publicised fatal losses in 25,076.64 flight hours (as of 2005), resulting in a demonstrated PLOA of 7.98e-5 losses per flight hour (roughly 1e-4). This is a rate much more analogous to that of an immature system in the flight test environment, backing the assertion of the flight crews and the Challenger and Columbia accident boards that the Space Shuttle is an experimental vehicle. Overemphasis on meeting schedules and the "normalization of deviance" (where undesired, unexpected or unexplained behaviour of a component of the system is progressively accepted as normal) have been well-documented as underlying causes of both Shuttle losses, [Anon 2003b, Deal, Feynman, and Vaughn]. Less immediately obvious is that given the underlying failures causing the losses of Challenger and Columbia did not originate with the Shuttle vehicles themselves, the question arises as to whether NASA abandoned the Apollo-era philosophy of treating any combination of "modules" as a single integrated system.

2.2.3.3 The Development of Fly-By-Wire Integration

The aircraft effectiveness and flight safety were always the main criteria in aircraft design. In particular it might be done by improvement of flying qualities and flight performances by different means including flight control system design (FCS). To the end sixties of the last century it was obvious that the shortcomings of mechanical linkage (increased weight, nonlinear effects, difficulties in realization of advanced control laws etc.) did not allow to realize new ideas. The new innovations were required to provide the new principles. Such new principles in improvement of flight performances are the following:

- Decrease of stability margin and use of unstable configuration even.
- Super maneuverability and high L/D ratio by use of specific aerodynamic and additional control surfaces.
- Integration of different aircraft systems (flight control and propulsive, for example).
- New principles in flying qualities, which were necessary to provide:
  - Optimization of flying qualities by use new algorithms adopted to the piloting tasks and pilot-aircraft system goals; and
  - Integration of flight control system and display.
- The problems in flight safety were solved by:
  - Development of automatic critical regimes warning and barrier system;
  - Creation of means for reduction of conflict between pilot actions and limited potentialities of flight control system;

- Redundancy of control surfaces and elements; and
- Reconfiguration of control surfaces and control laws.

Fly-by-wire (FBW) technology was one of the innovations allowed to solve these principles. It was developed to the end of sixties and realized in aircraft development in seventies.

The main features of FBW FCS are:

- Electrical linkage between pilot and actuators;
- Electrohydraulic actuators;
- Computers;
- Advanced control laws;
- Enlargement of FCS functions; and
- New manipulators.

The FBW technology allowed designers to integrate all mentioned above principles in improvement of flight performances, flying qualities and flight safety. The technology is based on achievements in design of flight control systems of previous generation. Some of them were the followings:

- Hydraulic actuators (The first experimental hydraulic mechanical actuator was developed and tested in Russia in 1949 [Bushgens et al 2001]. A MIG-15 was used as a test-bed for that purpose;
- Innovations in improvement of flight performances: c.g. location control system for reduction of stability margin (aircraft M-3 and M-50, Russia [G. Bushgens et al 2001]: new additional control surfaces located at the fuselage nose (Tupolev Tu-144, Russia [Bushgens et al 2001, Bushgens, 1990]);
- Redundancy of the systems (two hydraulic channels were used on MIG-19, and four – on Tu-144);
- Sectioning of control surfaces (eight sections of Tu-144 elevons); and
- Complicated algorithms for flight control systems improved considerably flying qualities (for example, RCAH (Rate Command Attitude Hold) type of system, tested in 1960 on aircraft M-3 [Bushgens et al 2001, Bushgens, et al 1979]).

All aircraft with FBW system can be divided on two generations.

The first generation of FBW aircraft are characterized by the following general features:

- Decrease of stability margin;
- Enlargement of maneuverable potentialities (fighters);
- Improvement of controllability;
- Appearance of electrohydraulic actuators;
- Advanced flight control laws provided necessary flying qualities of statically unstable aircraft, new types of dynamic responses (RCAH, ACAH (Attitude Command Attitude Hold), etc.);
- Analog computers;
- Increase of number of redundant (alternative) systems;
- New control surfaces; and

- Existence of mechanical channel (as a parallel, alternative, basic for one of the channel) in many cases.

The first aircraft developed in Russia as FBW aircraft was designed at Suhoi company. The first flight of this supersonic bomber T-4 (Figure 2.16) was in 1972 [Bushgens et al 2001]. Two years later first American mass production fighter F-16 (Figure 2.17) carried out the first flight. Aircraft T-4 had a weight 100 tons, Mcruise=3, FBW system in all control cannels. Its additional control surface was used for improvement of flight performances in all flight envelope. It had quadruple redundancy and reduced stability margin – 0% average (±5%). The first Russian FBW fighter SU-27 (Figure 2.18) was also developed at Suhoi company. It had quadruple redundancy, FBW system was in longitudinal channel [Shenfinkel]. The aircraft has small static instability (up to 5%). Its leading edge deflects as, a function of angle of attack. SU-27 demonstrates the super agile potentiality (the "cobra" maneuver).

Figure 2.16: The First Fly-By-Wire Aircraft, T-4.

Figure 2.17: The First Mass Production Fly-By-Wire Aircraft, F-16.

Figure 2.18: Fly-By-Wire Aircraft, Su 27.

In development of first generation of FBW aircraft new dynamics problems were exposed. It was shown that existence of the rate limit $\dot{\delta}_{\max}$ in combination with aircraft static instability can cause the instability of aircraft – FCS dynamics when the unstable oscillations take place (so-called 'instability in gross'). It was shown also that the existence of actuator's nonlinearity in case of unstable aircraft can cause the stable oscillations with constant amplitude (so-called 'instability in small'), deterioration of actuator frequency response (for small input signals).

Because of these problems there were developed a number of means for their suppression. For the suppression of unstable cycles it was design nonlinear prefilter (Figure 2.19), used now widely for FBW aircraft [Belosvet et al, Shenfinkel]. It was developed also the technique for the selection of feedback filters and actuator parameters guaranteed the stability of 'aircraft + FCS' system provided the specific amplitude of oscillations [Berko et al, Bushgens et al 2001, Kluev et al, Konstantinov et al 1999].

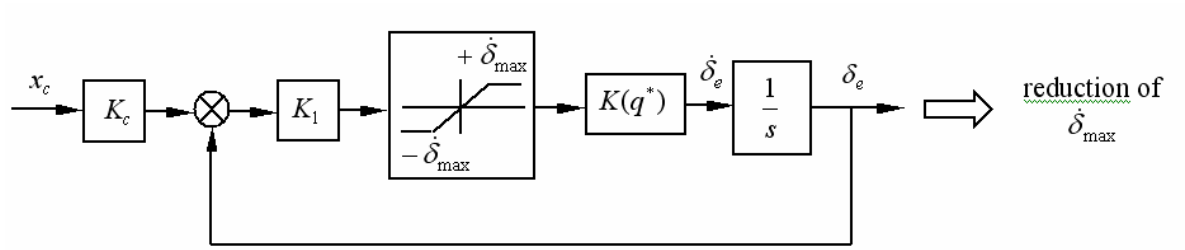

Figure 2.19: Prefilter for Fly-By-Wire System.

For the conservation of stable cycles with limited amplitude of oscillations ($\Delta n_z \le 0.2g$ and $\Delta\theta \le 0.1\deg$) it was developed a number of scheme, design and technological means for improvement of actuator characteristics [Bushgens et al 2001, Kluev et al].

In the frame of first generation of FBW aircraft there were created fly-by-wire systems for passenger and transport aircraft too: A-320 and later configurations (France); IL-96-300, AN-124, AN-225 (Russia).

All Russian FBW systems for civilian planes had the similar principle shown on Figure 2.20.

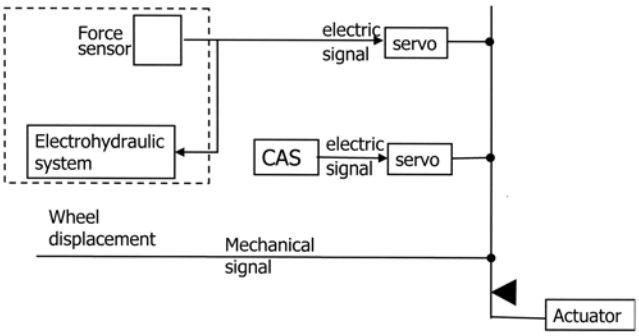

Figure 2.20: Confirmation of Fly-By-Wire and Mechanical Systems.

The electrical signal from wheel and CAS are mixed with mechanical signals constantly in all flight phases.

The second generation of FBW system is characterized by new features associated with the use of:

- Digital computers (instead of analog);
- Adaptive control laws, reconfiguration of FCS and control surfaces;
- Integration of FCS with of critical regimes warning and barrier system and FCS;
- Additional control surfaces (canard, leading edge, thrust vectoring); and
- Enlargement of control modes.

The first completely digital FBW system developed in Russia for aerospace Buran's experimental prototype –'BTC'. This vehicle was used for testing of FCS during the unpowered landing in manual and automatic control.

The FCS of modern FBW aircraft is characterized by enlargement of control modes and functioning of a number of control surfaces (see Figure 2.21).

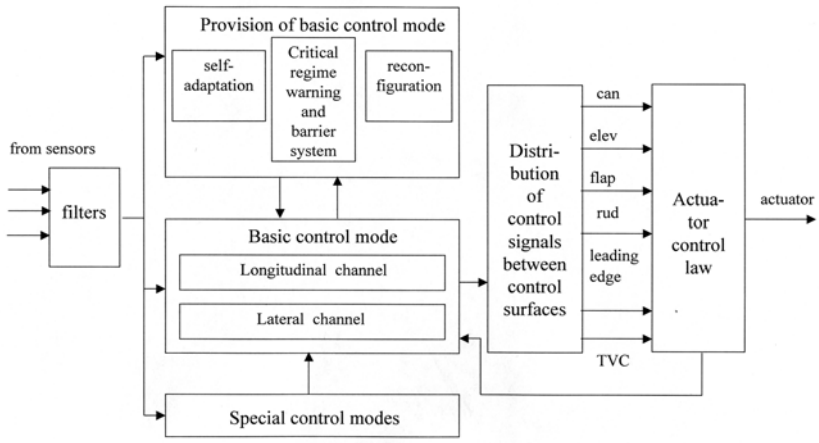

Figure 2.21: Enlargement of Control Surfaces and Modes.

For the last FBW generation of fighters there were generated the new algorithms of FCS based on principles of adaptation [Dinnikov et al 2000, Dinnikov et al 2001, Konstantinov, 2002]. It allowed to

improve the flying qualities and flight safety, to reduce rate limit ($\dot{\delta}_{C\max}$) in 1.5 – 2 times. On the basis of RCAH system potentialities there were developed and installed the new critical regimes and barrier system Figure 2.22.

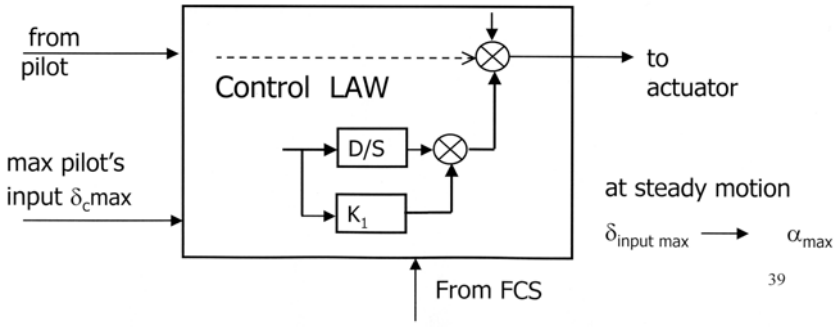

Figure 2.22: Integration of Flight Control System and Stall Warning System.

Its algorithm was integrated with FCS law. The typical FBW military aircraft have the increased numbers of control surfaces (F-22, SU-30). It leads to the necessity to distribute the control signals between the surfaces. It is realized by digital computer in optimal way as a function of piloting task and flight regime. The high and new potentialities are realized by use of thrust vectoring control (TVC). It allows to realize completely new maneuvers including "loop", "cobra" and stable flight at all angle of attacks. Such super agility is realized by the different ideology in Suhoi and Mikoyan aircraft with TVC. As for Suhoi aircraft (SU-30 MK) each TVC is rotating along one [Lokshin et al] and as for new Mikoyan aircraft MIG-29 TVC [Obolensky] TVC rotates along two axes.

The new means for suppression of instability of statically unstable aircraft were developed. One of them is the additional control surface (canard SU-30 MK) Figure 2.23. Its integration with elevator allowed to decrease rate limit $\dot{\delta}_{\max}$ [Konstantinov, 2002].

Figure 2.23: Su 30 MK Aircraft.

There were developed also the new prefilters for suppression of PIO. One of its version developed for aerospace vehicle 'Buran' is shown on Figure 2.24 [Efremov et al, 1995].

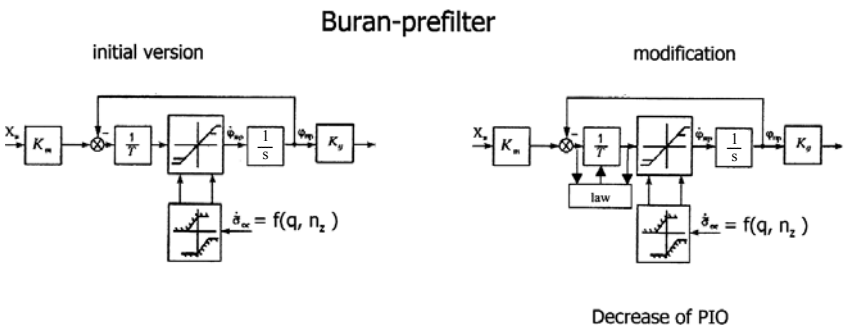

Figure 2.24: The Buran Prefilter and its Modification.

The conservation of stable oscillations with amplitudes $(\Delta n_z \leq 0.2g$ and $\Delta\theta \leq 0.1\deg)$ for the modern FBW fighters are reached by self-adaptation algorithm of actuators (see Figure 2.25).

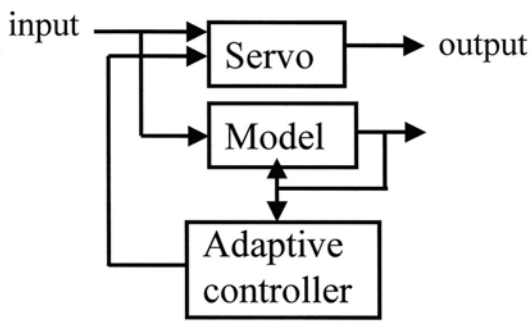

Figure 2.25: Self-Adaptive Actuator

It allows suppression of the influence of input signal on frequency response, even for very small amplitudes. Therefore it reduces the tendency to rate limit and thus improves flying qualities too.

One of the functions of all FBW system is the reconfiguration. It has to be realized when the alternative control laws (or their parameters) have to be used. The specific reconfiguration was offered to new generation of trainers (MIG-AT and YAK-130). These aircraft have the potentiality to change their flying qualities by digital FBW FCS to train pilots to control different aircraft.

The change from mechanical linkage to electrical systems caused the modification or appearance of new manipulators for FBW aircraft. There is a miniwheel for TU-204, and a side stick for the F-16 and A-320. The digital FBW technology was used in passenger aircraft designs also, for example Airbus A-340 and A-380, Boeing-777, Russian TU-204 and TU –334. All these planes are characterized by reduced stability margin. The TU-204 have analog and mechanical channels in addition to digital as alternative [Bushgens et al. 1995]. They can be switched on in case of failure of the digital system. Many modern configurations, e.g. the TU-334, have completely digital FBW system without any alternative in case of failure.