Chapter 7 – CORROSION MORPHOLOGY: CORROSION PILLOWING AND CRACKING

Nicholas C. Bellinger
Institute for Aerospace Research
National Research Council Canada
Ottawa, Ontario
CANADA

7.1 INTRODUCTION

This section examines the corrosion induced distortion of aircraft skins commonly referred to as "Pillowing", which involves plastic deformation and in extreme cases cracking in lap joints. Examples of pillowing and pillowing induced cracking in some typical commercial transport aircraft are shown. It is suggested that both the associated stresses and the cracking that arises due to these stresses should be taken into account during the assessment of structural integrity. References are provided to literature that explores these suggestions in more detail.

7.2 THE PILLOWING PHENOMENON

The majority of fuselage lap joints consist of an outer and inner skin fabricated from aluminum alloy 2024-T3 joined together with multiple rows of countersunk rivets, Figure 7-1, as well as an adhesive layer. During the operation of an aircraft the adhesive layer can deteriorate and disbond allowing moisture to migrate between the skins. This moisture can in turn, breakdown the material protective system resulting in the formation of crevice corrosion. As the corrosion forms, the skins between the rivets are forced apart due to the presence of the corrosion products. A chemical analysis on corrosion samples taken from service-exposed lap joints indicated that the insoluble product contained a mix of oxides, primarily aluminum oxide trihydrate, which has a molecular volume ratio of 6.454 times that of pure aluminum [1]. It is this high molecular volume ratio that is responsible for the deformation of the riveted skins in a joint resulting in the appearance commonly referred to as "pillowing".

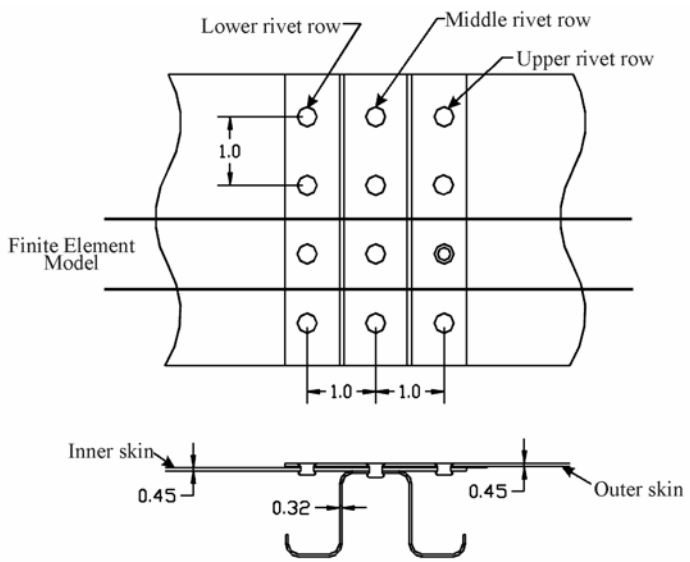

Figure 7-1: Schematic of Typical Longitudinal Boeing Lap Joint (Dimensions are in inches – 1 inch = 25.4 mm).

The most common procedure is to inspect the fuselage joints visually from the aircraft exterior. Typically inspectors look at the lap joint surfaces for traces of corrosion products, and for corrosion pillowing deformation, most often with the aid of a flashlight. Figure 7-2, Figure 7-3 and Figure 7-4 show typical images of pillowing obtained using an optical inspection method, known as D-Sight™, designed to enhance the appearance of the surface perturbations. The fundamental assumption is that corrosion is not significant unless the inspector is able to see shadows cast by the deformed surface. Unfortunately, there is no data on the Probability Of Detection (POD) for corrosion pillowing using visual inspection.

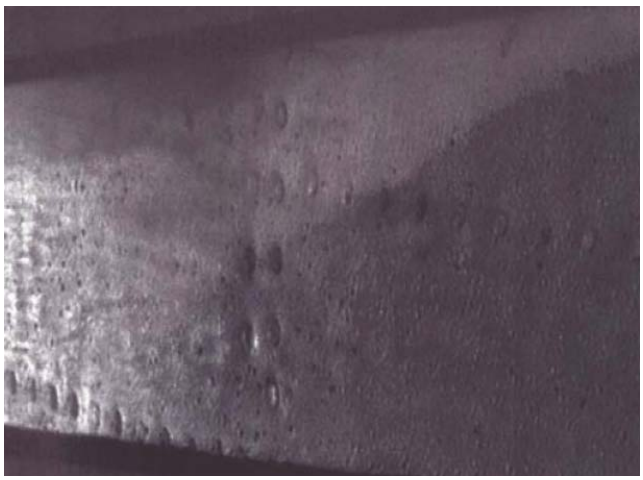

(a) No corrosion indications.

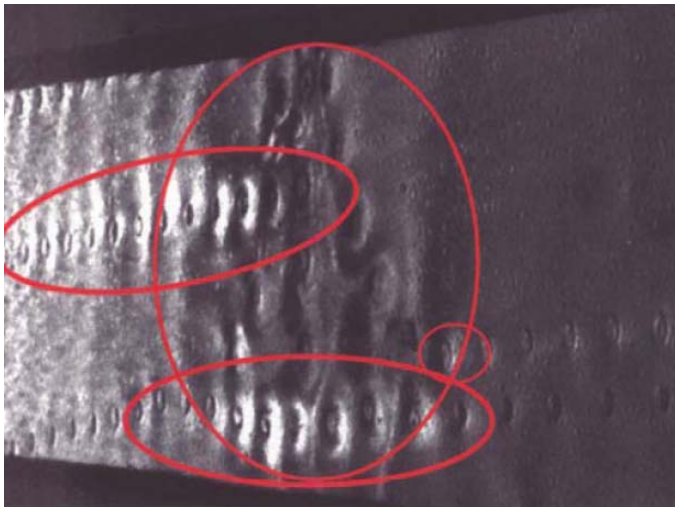

(b) Corrosion is present within the joint which is indicated by a bright to dark change in an area of the grayscale image.

Figure 7-2: Enhanced Visual Inspection Results (D-Sight™) of Fuselage Lap Joints.

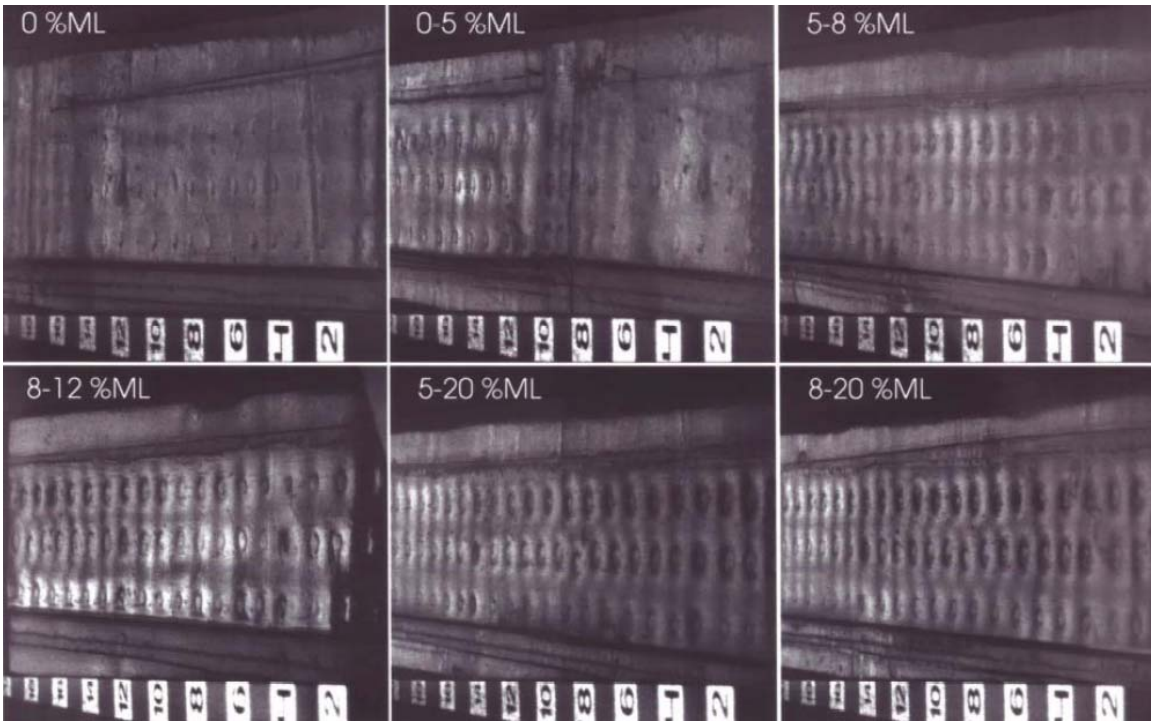

Figure 7-3: Various D-Sight™ Images Showing Degree of Pillowing for Different Level of Material Thickness Loss (ML).

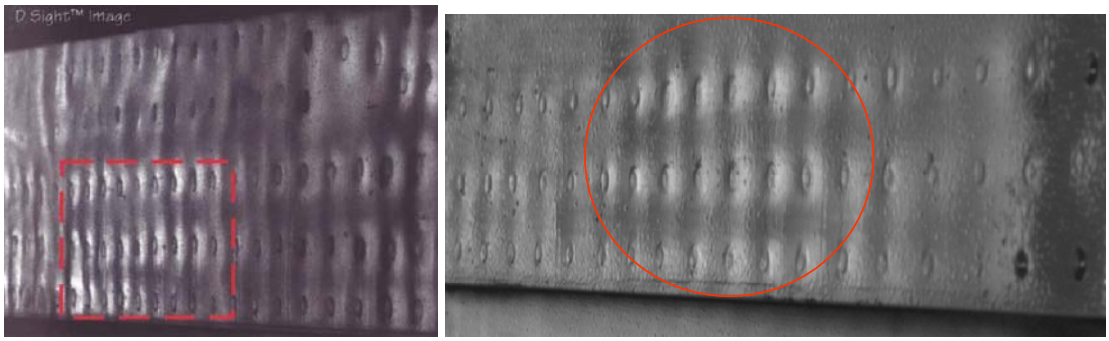

Figure 7-4: D-Sight™ Images Showing Pillowing Caused by Corrosion Products.

7.2.1 Mathematical Model of Pillowing

The unaided visual non-destructive inspections used to detect corrosion pillowing in fuselage lap joints are not capable of determining the level of corrosion within a joint. Therefore to determine if a correlation existed between the amplitude of the pillowing deformation of the outer skin of a lap joint to the degree of corrosion inside the joint a mathematical model was developed [2]. The model assumed that the corrosion product was distributed within the joint so as to exert a uniform lateral pressure on the fuselage skins. It was also assumed that the joint was symmetrical about its mid-plane and thus only the outer skin was modeled. The closed-form classical plate theory of Timoshenko and Krieger was used to calculate the deformation of the outer skin supported by equidistant rivets and subjected to a uniform lateral pressure [3]. In order to better understand the effect that the rivet spacing ratio had on corrosion pillowing, the deformed shapes of plates with various rivet spacing ratios were calculated and the results are plotted in Figure 7-5. The results showed that as the rivet spacing increased, the relative deflections at the shorter edges decreased while those at the longer edges increased, which can significantly reduce the probability

of detecting the corrosion visually. This suggests that the detection limit for joints with a high rivet spacing ratio may be significantly larger than the maximum allowed 10% thickness loss.

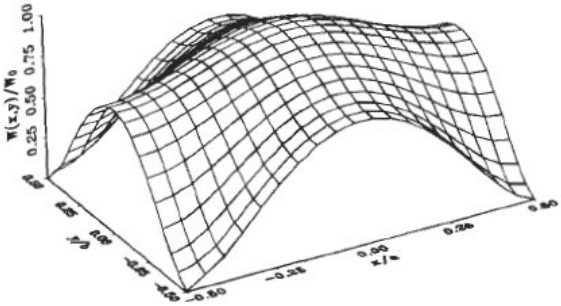

(a) Rivet spacing of 1.0.

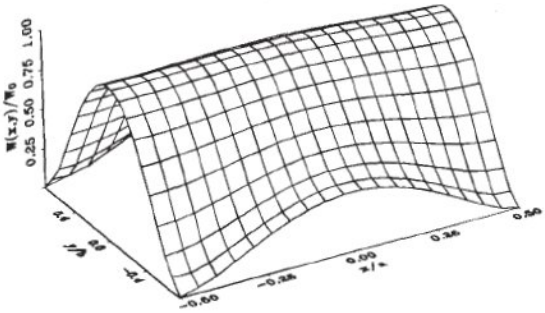

(b) Rivet spacing of 1.5.

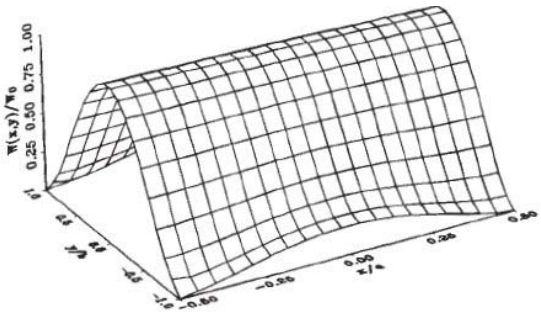

(c) Rivet spacing of 2.0.

Figure 7-5: Effect of Rivet Spacing Ratio on Pillowing Ratio [4].

It should be mentioned that although this section has concentrated on the effect that corrosion pillowing has on the stress state in fuselage lap joints, this phenomenon is present in any area of an aircraft where corrosion is contained between two fixed surfaces and the subsequent increase in stress occurs where the material is restricted from deforming.

7.3 PILLOWING CRACKS

Following the finite element analysis [4], non-surface breaking cracks were found in a number of naturally corroded joints removed from both retired and operational aircraft, Table 7-1. These cracks were identified using either x-ray non-destructive inspection techniques or when some of the joints were disassembled and the corrosion products removed. As can be seen from Table 7-1, cracks were found in a number of different locations on various aircraft with diverse operating lives. For the A300 incident a service bulletin was found that was issued in 1982 by Airbus Industrie [5]. The bulletin described the discovery of numerous cracks around the rivet holes of a corroded lap joint that resulted in a “star-shape” pattern.

Table 7-1: Recorded Incidences of Pillowing Cracks.

Type of Aircraft	Hours/Cycles	Location of Crack	Layer	WFU* / CUT**
L1011	38,040 / 31,370	33R / BS589-609	First	Dec. 92 / Sept. 93
B727-235	55,640 / 48,660	4R / BS1100	Second	Sept. 92 / May 93
B727-200	D Check	S30 / BS1090	First	In Service / Aug. 95
B727-100	61,890 / 54,150	S19R / BS600-640	Second	July 94 / July 96
B727-90C	72,400 / 56,700	S19-26L / BS440	First	In Service / Oct. 95
B727-235	56,870 / 49,530	S19R / BS700-720	First	Mar. 92 / Feb. 93
A300(AD)	10,400 / 6,940	S31L / FR26-31	First	In Service / Oct. 81
B727-295	61,854 / 55,465	S19R / BS660-680	First	Jan. 90 / Feb. 98
B727-295	63,349 / 55,676	S19R / BS720A-720B	First	Aug. 89 / Feb. 98
B707(Bueno)	–	Floor to Skin Joint	First	In Service
B707-3J6C	26,545 / 11,448	S20R / BS590-600H +10	–	Feb. 97 / Jan. 99

** WFU-Date aircraft was withdrawn from service.*

** CUT-Date when lap joint was cut from aircraft.

The presence of these non-surface breaking cracks, referred to as pillowing cracks, has raised concerns into the effect they could have on the structural integrity of corroded fuselage lap joints [6]. Visual examinations of lap joint faying surfaces that were cleaned of corrosion products revealed that pillowing cracks could extend to approximately one-quarter to one-half the rivet pitch.

To determine the failure mode of these pillowing cracks, a number of cracks were examined using both optical and scanning electron microscopy [4],[7],[8]. The following observations were made:

- Pillowing cracks tended to occur in groups (i.e., “star-shape” pattern cracks at more than one rivet hole), which did not normally penetrate through the thickness. The cracks always occurred on the side of the hole that was affected by the increased stress due to the pillowing and tended to propagate into the pillowed region Figure 7-6.
- The crack faces that were pried open contained corrosion products and showed extensive intergranular fracture with numerous secondary cracking, Figure 7-7.
- A number of the cracks had multiple nucleation sites. Although these sites could not be determined, they were evidently based on the different crack planes present, Figure 7-8.

- The crack growth through the thickness was not perpendicular to the faying and outer skin surfaces but occurred at an angle, Figure 7-9.
- Some of the fracture surfaces contained fatigue striations near the crack edge where the corrosion was light, Figure 7-10 and suggests that once these cracks form, they may continue to grow under fatigue loading.

(a) Optical image of cracks in Boeing 707 longitudinal lap joints.

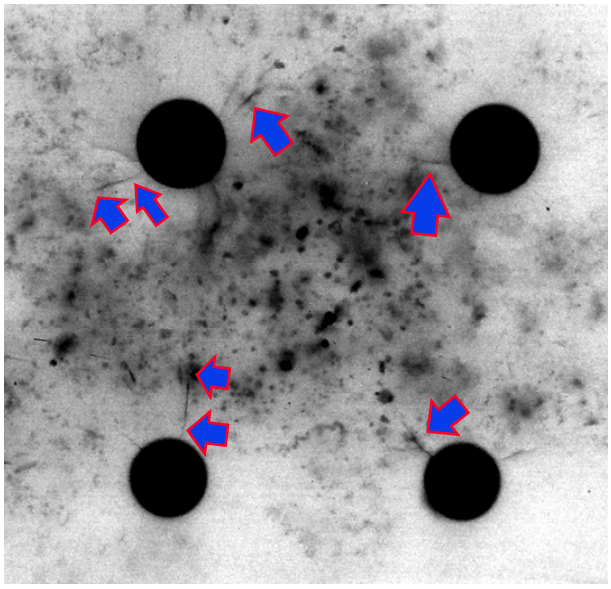

(b) X-ray micrograph showing cracks in L1011 lap joint.

Figure 7-6: Various Images Showing the Typical Star-Shape Pattern Associated with Pillowing Cracks.

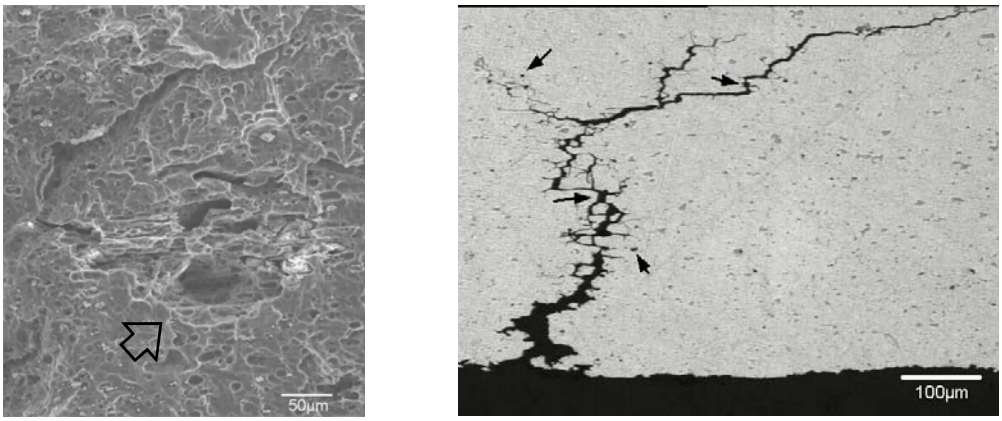

(a) Scanning electron micrograph of crack face.

(b) Optical micrograph obtained from progressive polishing.

Figure 7-7: Micrographs Showing the Intergranular Cracking with Numerous Secondary Cracks.

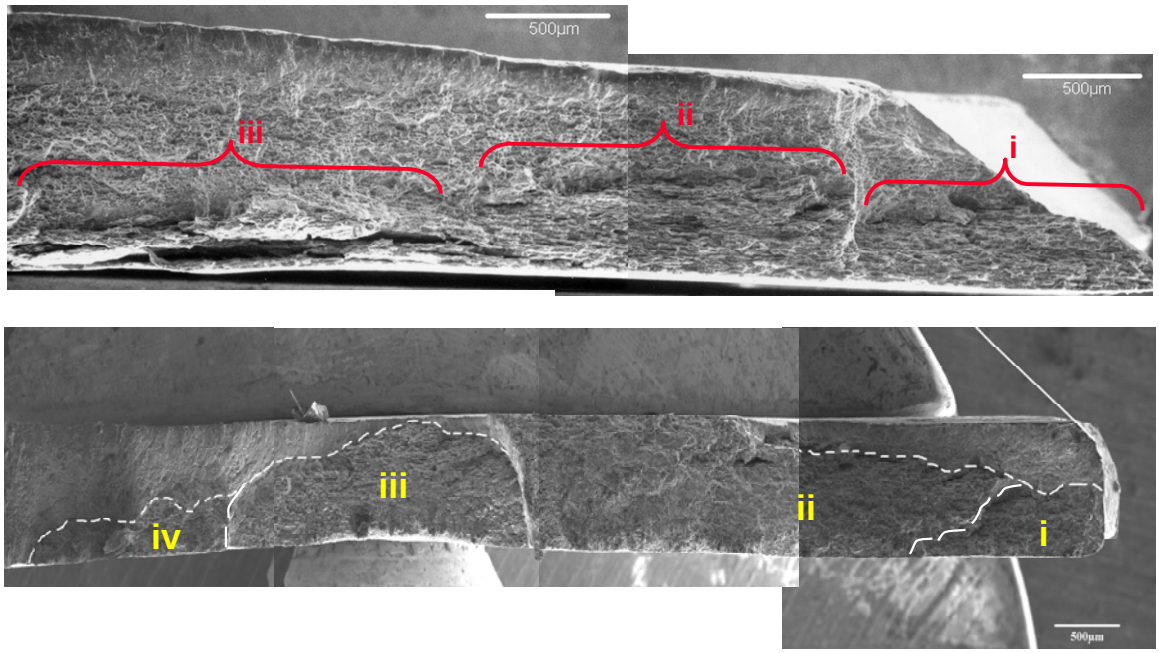

Figure 7-8: Micrographs Showing Multiple Crack Nucleation Sites.

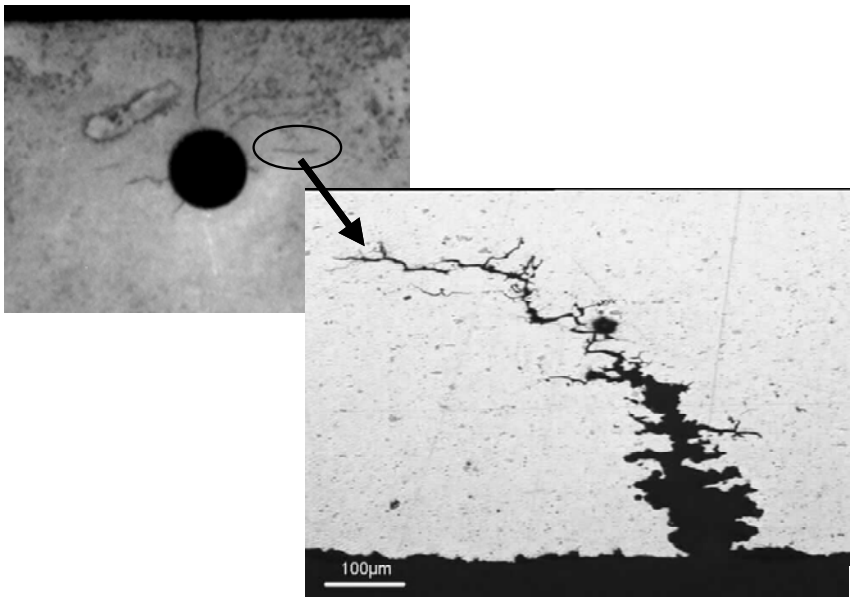

Figure 7-9: Optical Image of Pillowing Crack Showing Angled Crack Growth. (Note that the crack occurred away from the edge of the hole but is still within the highly stressed area caused by the corrosion pillowing.)

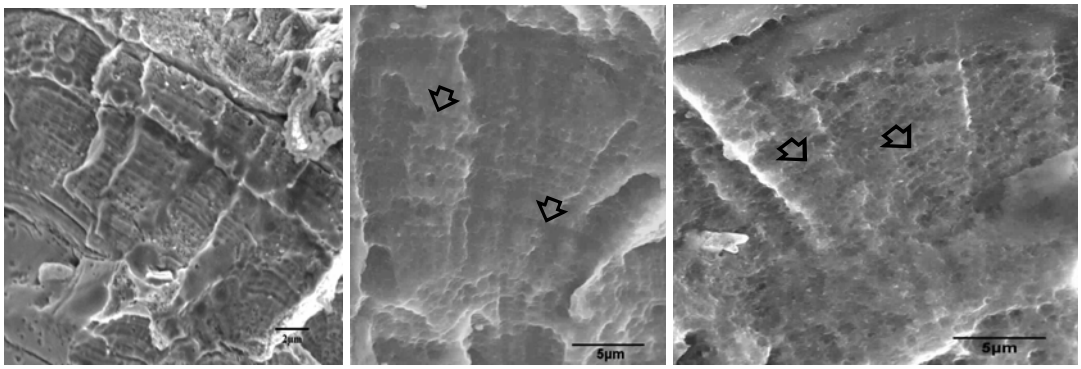

Figure 7-10: Scanning Electron Micrographs Showing Fatigue Striations that were Found on the Fracture Surfaces on Some Pillowing Cracks.

With the discovery of pillowing cracks and the fact that Wanhill discovered these cracks at every fastener hole in an area of about one bay length (500 mm) [9], it is proposed that the term Multi-Site Damage (MSD) should include corrosion, since the effect that pillowing cracks may have on structural integrity could be similar to fatigue crack MSD.

7.4 REFERENCES

[1] Krishnakumar, S., Komorowski, J.P. and Sproule, I, “Chemical Characterization of Corrosion Products in Fuselage Lap Joints”, LTR-ST-1952, November 1993.

[2] Bellinger, N.C., Krishnakumar, S. and Komorowski, J.P., “Modelling of Pillowing Due to Corrosion in Fuselage Lap Joints”, Canadian Aeronautics and Space Journal, Vol. 40, No. 3, pp. 125-130, September 1994.

[3] Timoshenko, S. and Woinowsky-Krieger, S., “Theory of Plates and Shells” (2nd Ed.), McGraw-Hill Book Company, 1959.

[4] Bellinger, N.C., Komorowski, J.P. and Gould, R.W., “Corrosion Pillowing Cracks in Fuselage Lap Joints”, Proceedings of the Second Joint NASA/FAA/DoD Conference on Aging Aircraft, NASA/CP-1999-208982/Part 2, Williamsburg, Virginia, pp. 535-544, 31 August – 3 September 1998.

[5] “Airbus Service Bulletin”, A300-53-178, Revision, 19 September 1988.

[6] Komorowski, J.P., Bellinger, N.C. and Gould, R.W., “The Role of Corrosion Pillowing in NDI and in the Structural Integrity of Fuselage Joints”, Proceedings of the 19th Symposium of the International Committee on Aeronautical Fatigue, Edinburgh, Scotland, 16-20 June 1997.

[7] Komorowski, J.P., Bellinger, N.C., Gould, R.W., Forsyth, D. and Eastaugh, G., “Research in Corrosion of Ageing Transport Aircraft Structures at SMPL”, CAS Journal – Special Edition 50th Anniversary of IAR, Vol. 47, No. 3, pp. 289-299, September 2001.

[8] Bellinger, N.C. and Komorowski, J.P., “Environmentally Assisted Cracks in 2024-T3 Fuselage Lap Joints”, Proceedings of the Third Joint FAA/DoD/NASA Conference on Aging Aircraft, Albuquerque, NM, USA, 20-23 September 1999.

[9] Wanhill, R.J.H., “Corrosion and Fatigue Assessment of Aircraft Pressure Cabin Longitudinal Lap Splices”, 5th International Aerospace Corrosion Conference, November 1999.