Chapter 18 – HOLISTIC STRUCTURAL INTEGRITY ANALYSIS FOR CORROSION IN A HUB ON A TRANSPORT AIRCRAFT FRAME

Thomas Mills and K.T. Honeycutt
Analytical Processes / Engineered Solutions, Inc.
Saint Louis, Missouri
USA

18.1 INTRODUCTION

This case study examines the failure of fuselage frames on the now-retired USAF C-141 aircraft. The component experiencing the problem was the frame at Fuselage Station (FS) 998. In particular, cracking was occurring in a hub for a main landing gear attachment point (Figure 18-1). Special concern was placed on this component because it was largely expected to be an 'infinite life' component, at least in the area where cracking was occurring. The discovery of cracks, not explained by any analyses, had the USAF confronting a very likely possibility of wholesale frame replacement throughout the fleet, which would have been a very costly option in terms of both dollars and asset availability. Replacing the FS 998 frame is major surgery.

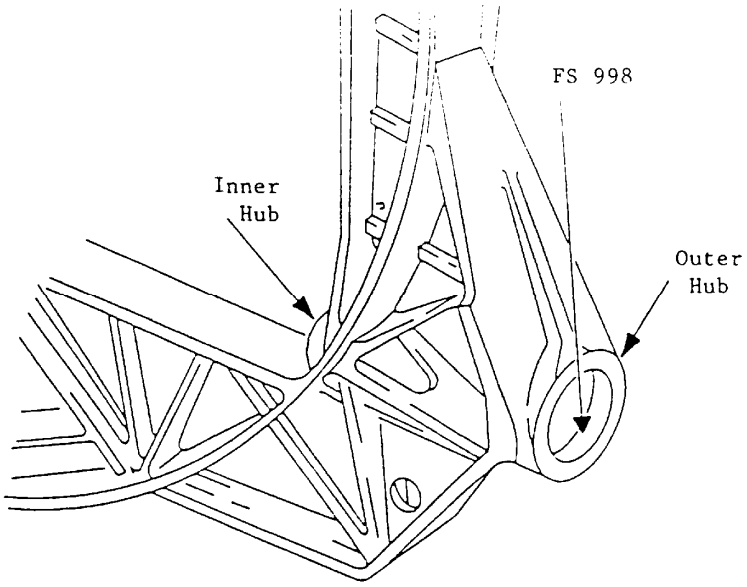

Figure 18-1: Drawing of Main Frame Landing Gear Hub.

In sight of the financial and logistical complexity of such a sizeable fleet-wide action, the decision was made to include analysis of this component in a 1997 USAF research and development program known as the Corrosion Fatigue Structural Demonstration Program (CFSD). Details follow.

18.2 FRACTURE ANALYSIS

As with any structural analysis, it is good to start with determining the root cause. As stated above, prior to the CFSD program, the cracking in this component was largely unexplained. Aircraft teardown and failure

analysis revealed corrosion pitting at the crack nucleation site of the failed frames. Beyond this, very little information was known about the nature of the pitting other than the fact that corrosion up to 250 microns (0.01 inch) deep was found on 20-year old components. This provided a target metric for the holistic structural integrity analyses discussed in the next section.

18.3 HOLISTIC STRUCTURAL INTEGRITY ANALYSES

As with any structural fatigue analysis, it is necessary to understand key aspects of the component, such as the material, geometry, and crack driving force. Beyond that, to practically implement a solution, we need to understand usage requirements, inspection capabilities, and other factors.

Fortunately, the frame was made from a common aerospace structural alloy, 7075-T6 aluminum. Geometry was easy to grasp, and the failure location in the hubs was in a region of mild stress gradient, so constant tension spectral stresses were an adequate representation of the component loading. Understanding the load spectrum itself, however, was more challenging, as the actual load spectrum was proprietary and not available. The best we could do, under direction of the C-141 Aircraft Structural Integrity Program (ASIP) manager, was to use the MIL-A-008866B specification for Nz exceedances during landing, and generate a blocked and randomized landing spectrum (see Figure 18-2) for 30,000 spectrum flight hours (one lifetime) of a C-141 aircraft.

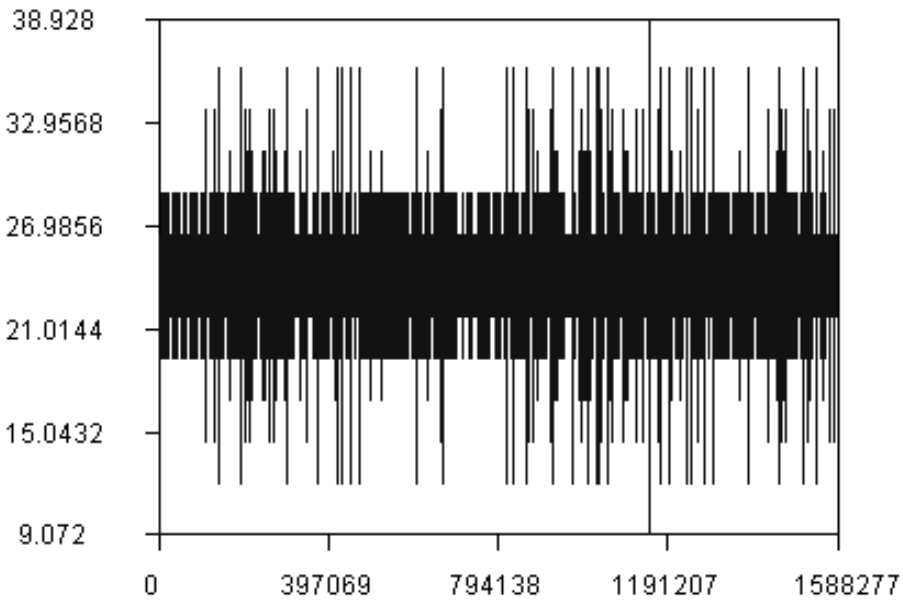

Figure 18-2: Load Spectrum Used in Analysis.

Fatigue analyses were then conducted using AFGROW (a publicly-available crack growth code) and two different starting crack sizes, specifically:

- 0.25 mm (0.01 inch) corner crack typical of ‘durability analyses’; and
- 1.25 mm (0.05 inch) corner crack typical of ‘damage tolerance analyses’.

These two cases provided ‘traditional’ bounds, wherein crack sizes typical of analyses in the industry were used. These two cases did not consider geometric corrosion effects on crack propagation, which is also typical of industry analyses.

The other critical aspect of the analysis, to trend it towards 'holistic', was to include pitting. In the models used, the presence of the pit amplifies the beta solution associated with the crack, which causes a shift in stress intensity, an increase in crack growth rate, and a decrease in fatigue life.

Additional complexities in the analysis had the pit grow according to a power law from time zero, with the end condition that the pit reached 250 microns (0.01 inch) in depth at 20 years (as determined by the teardown analysis from the fleet). This is a conservative approach, as pitting most likely did not occur until later in service after coating breakdown.

Figure 18-3 shows the results of the demonstration analyses. In practice, the fleet was experiencing failures in the range of 35,000 to 43,000 flight hours. Using traditional analysis techniques and the common durability crack size of 0.25 mm (0.01 inch), the hub showed flat crack growth (practically speaking, infinite life). On the other extreme, by assuming a damage tolerance crack size of 1.25 mm (0.05 inch), the component appeared to have an extremely short service life, which results in a heavy and expensive inspection burden.

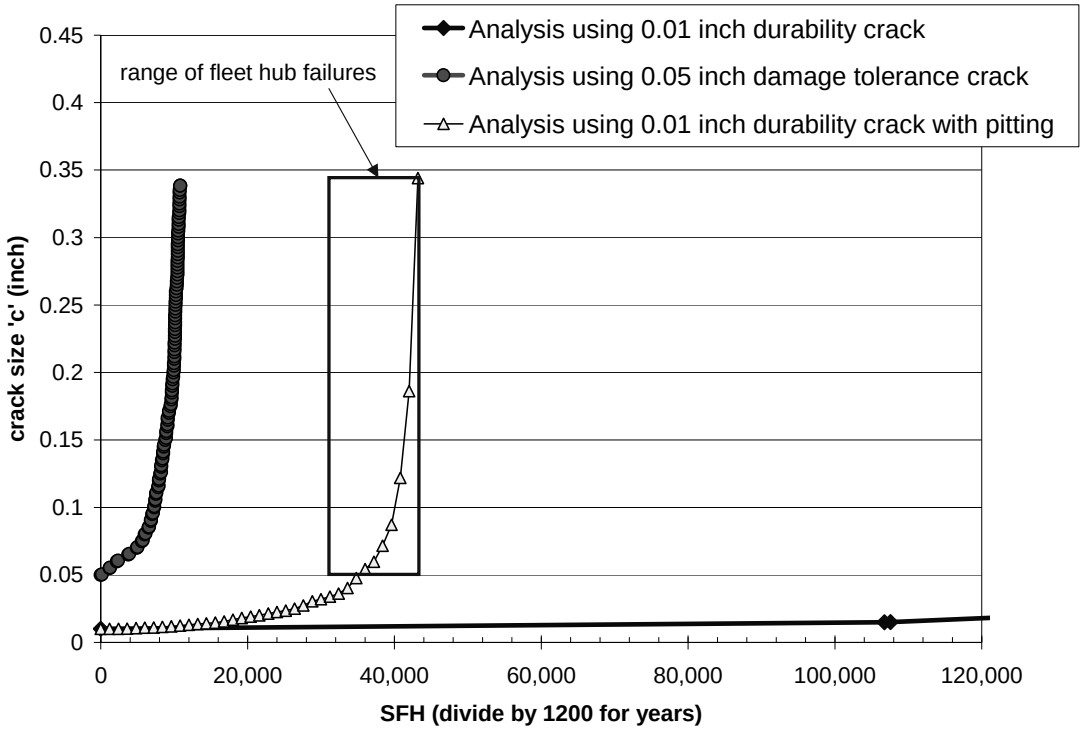

Figure 18-3: Crack Growth Analysis of Main Landing Gear Hub Showing Traditional and HOLSIP Analyses.

However, by including corrosion pitting in the traditional durability analysis, the life capability is reduced considerably but accurately (less than with damage tolerance assumptions) and estimates structural capability in the range of the fleet failures. The impact of corrosion is clear and further demonstrates the importance of holistic structural integrity considerations in aircraft maintenance, and also illustrates the power of these methods to identify corrosion-susceptible structure during design.

18.4 DISCUSSION

In the case of FS 998 frame, holistic structural integrity methods were able to correlate analysis life with field failures better than industry standard techniques. The inclusion of pitting in the life assessment

captured the general flavor of the fleet experience and provides an analytical path that was previously unavailable.

The lesser consequences of failure associated with this location on the frame precluded it being managed as a damage tolerance control point in practice. At the same time, the sensitivity of this area to pitting also meant that considering it to be an infinite life component was not effective either. Inspections for pitting in this location would be appropriate, since such violations of surface integrity appear to be a critical precursor to the evolution of fatigue failure.

This case study provided another example of a retrospective corrosion fatigue failure analysis to illustrate how information can be used to plan inspections for the appropriate types of damage in lieu of wholesale, major structural replacements across an entire fleet. The methods used were completely compatible with existing methodologies and ideologies, which also makes it possible to set inspection intervals, for instance, to guard against cracks that may form from previously undetected corrosion (Note: this is not a trivial location to access for the purposes of inspection, so we cannot look whenever we want).

An important lesson to learn from this case study is that the most efficient capability of these methods, from both safety and economic perspectives, will only be realized when quantitative evaluations of real-time degradation processes are proactively entrenched in the design requirements for new systems. In the same way that damage tolerance assessments can identify fracture critical structure, corrosion sensitivity analyses can identify corrosion critical structures and lead to more corrosion tolerant designs.